HINO 300 Series

Tipper Range
Crew Cab Models

*717 Crew Tipper shown

ADR 80/03 Model
300 Series Tipper Range

KEY FEATURES

Crew Cab with 7 seats (3 front, 4 rear)
Rear Passenger Air Conditioning
Factory Tipper Bodies
Cruise Control
Dual SRS Airbags
Ventilated Disc Brakes Front and Rear
Anti-lock Brake System (ABS)
Vehicle Stability Control (VSC)
Rear View Camera
Traction Control (TC)
Manual or Automatic Transmission variants
Easy Start (Manual Model Only)
ADR 80/03 Emission using Euro 5
Also meets EEV emission levels
Driver Suspension seat
ECE R-29 Cab Strength Certified

KEY SPECIFICATIONS

GVM Range	4495 to 8500kg
GCM Range	7300 to 12000kg
Power	110 kW (Auto)
	121 kW (Man)
Torque	420 Nm (Auto)
	464 Nm (Man)
Transmissions	6 Speed (Auto)
	6 Speed (Man)
Tipper Volume	3.2m^3 and 3.4m^3
Tipper Length	3.8m and 4.0m

Tipper Range
Crew Cab Models
Engine & Driveline specifications

ENGINE

Model	N04C-US	N04C-UT
	Auto	Manual
Max output ISO Net @ 2500 rpm	110 kW (150 Hp)	121 kW (165 Hp)
Max Output ISO Net @ 1400rpm	420 Nm	464 Nm
Max Engine Speed	3100 rpm	
Type	Diesel 4 cycle 4 cylinder in line overhead valve, water cooled	
Combustion System	Direct injection type	
Bore & Stroke	104 mm x 118 mm	
Piston displacement	4.009 Lts	
Fuel Injection	Electronic control, common rail type	
Air Intake system	Turbo, intercooled	
Air Cleaner	Paper Element	
Fan Clutch	Equipped	
Exhaust	Catalytic convertor with Diesel Particulate Active reduction system (DPR)	
Exhaust Outlet	Horizontal (Rear facing)	
Emission Control System	EGR & DPR meeting ADR 80/03 using Euro 5. Also meeting EEV emission levels	

CLUTCH (Manual models only)

Clutch type	Dry single plate, diaphragm type with damper springs
Facing outside diameter	325mm
Facing lining area	483cm² x 2
Control	Hydraulic with vacuum booster

TRANSMISSION

Auto	A860E Full automatic 6 speed with double overdrive
Manual	MZZ6F 6 speed synchromesh with single overdrive

BRAKES

Service brakes	Hydraulic system with ventilated disc brakes front and rear
Control	Vacuum servo with hydraulic assist & dual circuits
Anti Lock Braking System	Equipped
Vehicle Stability Control (VSC)	Equipped
TRaction Control (TRC)	Equipped
Easy Start system (ES)	Equipped (manual models only)
Exhaust Brake	Electro Vacuum actuator with valve in the exhaust pipe
Park Brake	Rear of Transmission

PERFORMANCE & GEAR RATIOS

For performance data, see the table on the back page.

A860E Automatic transmission

1st	3.743	5th	0.773
2nd	2.003	6th	0.634
3rd	1.343	Rev.	3.697
4th	1.000		

MZZ6F Manual transmission

1st	6.369	5th	1.000
2nd	3.767	6th	0.782
3rd	1.966	Rev.	6.369
4th	1.355		

ELECTRICAL

Type	24 volt, negative earth
Batteries	12V x 2, series connected
Alternator type	Built-in rectifier and voltage regulator
Capacity	24V – 80AMP
Starter capacity	24V, 4.5kW

CHASSIS FRAME

Type	Ladder-shaped channel section side rails
Chassis width at rear	750mm
Max Section in mm	192.8 x 65 x 5.9 (depth x flange x thickness)
Tensile strength	540N/mm²
Towing hooks	Equipped at front and rear

STEERING

Type	Telescopic and Tilt Steering column with Recirculating Ball with integral Power steering

CAB EXTERIOR

Type	Forward control, all steel welded construction, fully trimmed
Windscreen wipers	Electric, dual wipers, intermittent and 2-speed
Outside rear mirrors	Remote control and heated & two convex spotters
Radiator grille	Painted same colour as cabin
Lamps	Halogen headlamps and fog lamps

Tipper Range
Crew Cab Models

Cab Equipment, Power Charts & Body Details

CAB INTERIOR

Windscreen glass	Laminated glass
Seating capacity	Seven
Driver's seat	4-way adjustable, urethane pads, high-back, lumbar support with suspension base
Assistant's seat	Fixed bench, urethane foam pads, high-back
Seat cover	Fabric cover
Seat belts	
Driver's seat	3-point type with ELR and pre-tensioner
Assistant's seat	3-point type with ELR and pre-tensioner
Centre passenger's seat	2-point type
Rear seat	Outer 3-point type, Inner 2-point type
Sun visors	For driver and passenger
Ventilator	Forced type by electric blower
Inside rear mirror	One, flat type
Cigarette lighter (24 volt)	Equipped
Audio Visual Unit	DAB+ AM/FM radio with CD & DVD player & Bluetooth & Rear View Camera
Heater and defroster	Dual zone
Air conditioner	Dual zone
Remote door locking	Equipped
Immobiliser	Equipped
Power windows	Equipped
SRS airbags	Equipped for driver and assistant
Drivers foot rest	Equipped (Auto models only)
Seat back console	Equipped
Overhead consoles	For driver and assistant
Cup holder	Equipped
Cruise control	Equipped

COMBINED POWER & TORQUE CHART (ISO Net) N04C UT & N04C US

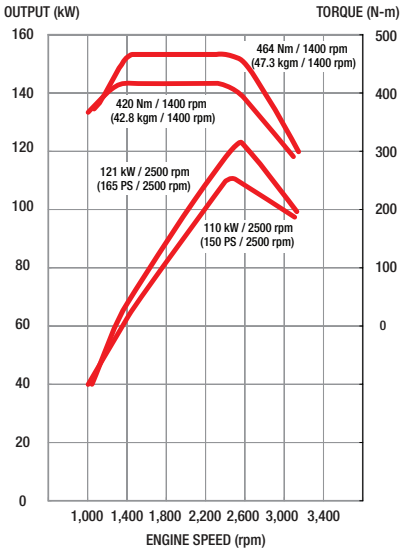

TIPPER BODY DETAILS

Model	717 Manual	816 Auto	917 Manual
Capacity	3.2m^3		3.4m^3
Body Length	3.8m		4.0m
Body Width	2000mm		
Body Side Height	430mm		
Tipping Angle (deg)	50		
Deck Plate Thickness	3.2mm		4.5mm
Front Plate Thickness	2.3mm		3.2mm
Tailgate Thickness	3.2mm		
Hydraulic Cylinder Bore & Stroke	100 x 510mm		
PTO	On Transmission		
Hydraulic Pump Type	Gear Type		
Model	VC03-15		
PTO & Tip Control	Lever in Cab		
Body Lock	Standard		
Rope Rails	Standard		
Drop Sides	Standard		
2 way gates hinged from the top and sides	Standard		

INSTRUMENTS

1. Meters and gauges
- km-kg system
- Engine tachometer
- Speedometer

2. Warning, pilot lamps and buzzers
- Turning signal & hazard indicator lamp
- Exhaust brake indicator lamp
- Engine oil pressure warning lamp
- Battery charge warning lamp
- High beam indicator lamp
- Parking brake indicator lamp
- Engine malfunction indicator lamp
- Fuel level warning lamp
- Fuel filter water accumulating level warning lamp
- Brake fluid level warning lamp
- Back-up warning buzzer
- ABS system failure warning lamp
- SRS airbag system failure warning lamp
- Easy Start indicator lamp*
- Cruise Control
- PTO Engaged

3. Switches
- Lighting switch
- Wiper and washer switch
- Exhaust brake switch
- Easy Start switch*
- Easy Start release timing adjuster switch*
- Cruise Control
- Traction Control OFF
- PTO Engaged

4. Multi Information Display
- Fuel gauge
- Coolant temperature gauge
- DPR accumulation gauge
- Odometer
- 2 trip meters
- Fuel consumption
  - Current
  - Average

5. Others
- One-key starting-stopping
- Horn button
- Remote door locking

* Easy start components are for Manual models only

Tipper Range
Crew Cab Models

300 Series

Dimensions

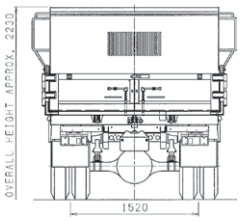

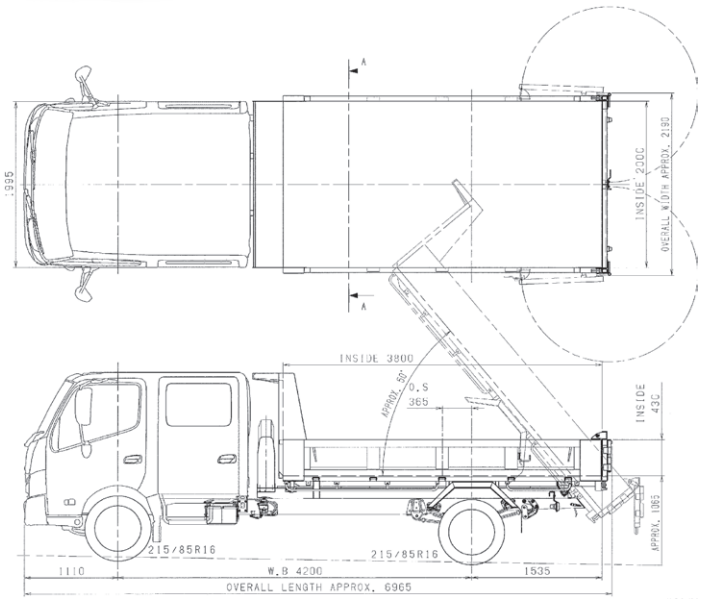

717 and 816 shown.

Drawings are for reference only to the table. For specific chassis layouts please refer to Body Mounting Manual drawings.

DIMENSIONS - mm / Capacities

Models		717 Man Tipper	816 Auto Tipper	917 Man Tipper
Product Code		XZU730R-QKFQTQ3 D	XZU730R-QKTRSQ3 D	XZU730R-QKFTTQ3 D
Turning Circle	Kerb to Kerb	13800		14800
	Wall to Wall	15200		16200
Load Rating	Front Axle	2800		3100
	Rear Axle	5280		6000
Wheel Base		4200		
Overall length		6965		7015
Width		2190		
Height		2230	2250	2260
Rear Overhand (ROH)		1535		1585
Fuel Tank Capacity		100 lts		
PERFORMANCE DATA				
Max Theoretical Speed		129 km/h	135 km/h	119 km/h
Engine speed @ 100 km/h		2400 rpm	2300 rpm	2600 rpm
Wheels & Tyres		215/85R 16		225/80R 17.5
Final Drive Ratio		4.333 : 1	5.125: 1	4.875 : 1
Approx Mass - kg	Total	3755	3795	4010
	Front	1940	1945	1960
	Rear	1815	1850	2050
	GVM STD	6500	7300	7995
	OPT	4495		8500
	GCM STD	10000	7300	11500
	OPT	7995	7300	12000

Approximate mass includes standard tools, fuel, spare tyre and subject to ±3% tolerance.

WARRANTY

New vehicle warranty period

Light Duty Model	Axle configuration	Standard warranty (whichever comes first)	Cab corrosion perforation
300 SERIES Crew Cab Tipper Range	4 x 2	3 years or 100,000km	36 months

Battery warranty – 12 months from date of delivery

Genuine parts or accessories warranty – 3 years unlimited kilometres when fitted by an authorised Hino dealer *

* For conditions, refer to the Hino Parts & Service warranty brochure

DISCLAIMER

Important notice. Hino Trucks are distributed in Australia by Hino Motor Sales Australia Pty Ltd A.C.N. 064 989 724.
All efforts have been made to ensure the information contained in this brochure was correct at time of printing or uploading. Hino Motor Sales Australia Pty Ltd reserves the right to alter any details of the specifications & equipment without notice. Hino in so far as it is permitted by law to do so, shall not be liable in any way as a result of any reliance placed by any person on anything contained in this brochure. You should therefore check with your authorised Hino dealer at the time of ordering your motor vehicle to ensure that colour, specifications, equipment, design features & options are available for the vehicle you are ordering. Please note that some options may only be available in combination with others. Authorised Hino dealers will on request provide up to date information on all accessories, design features, prices & availability.

HS300CREWTIPPER-1016