**Refer to detail of the cab, chassis and chassis frame drawing based on following table.**

**RELEVANT MODEL**

| CLASSIFICATION NUMBER | CHASSIS DRAWINGS | | | |
|---|---|---|---|---|
| | CAB | CAB BACK | CHASSIS | CHASSIS FRAME |
| **SS-019** | C-1 | CB-1 | CH-1 | CF-1 |
| **SS-020,021** | C-2 | CB-2 | CH-2 | |
| | | | | |
| | | | | |
| | | | | |
| | | | | |
| | | | | |

• Refer to chapter 1, 3 chassis specification for classification number.

## 8.1 CAB DRAWINGS

No. C-1

• Front

Unit : mm

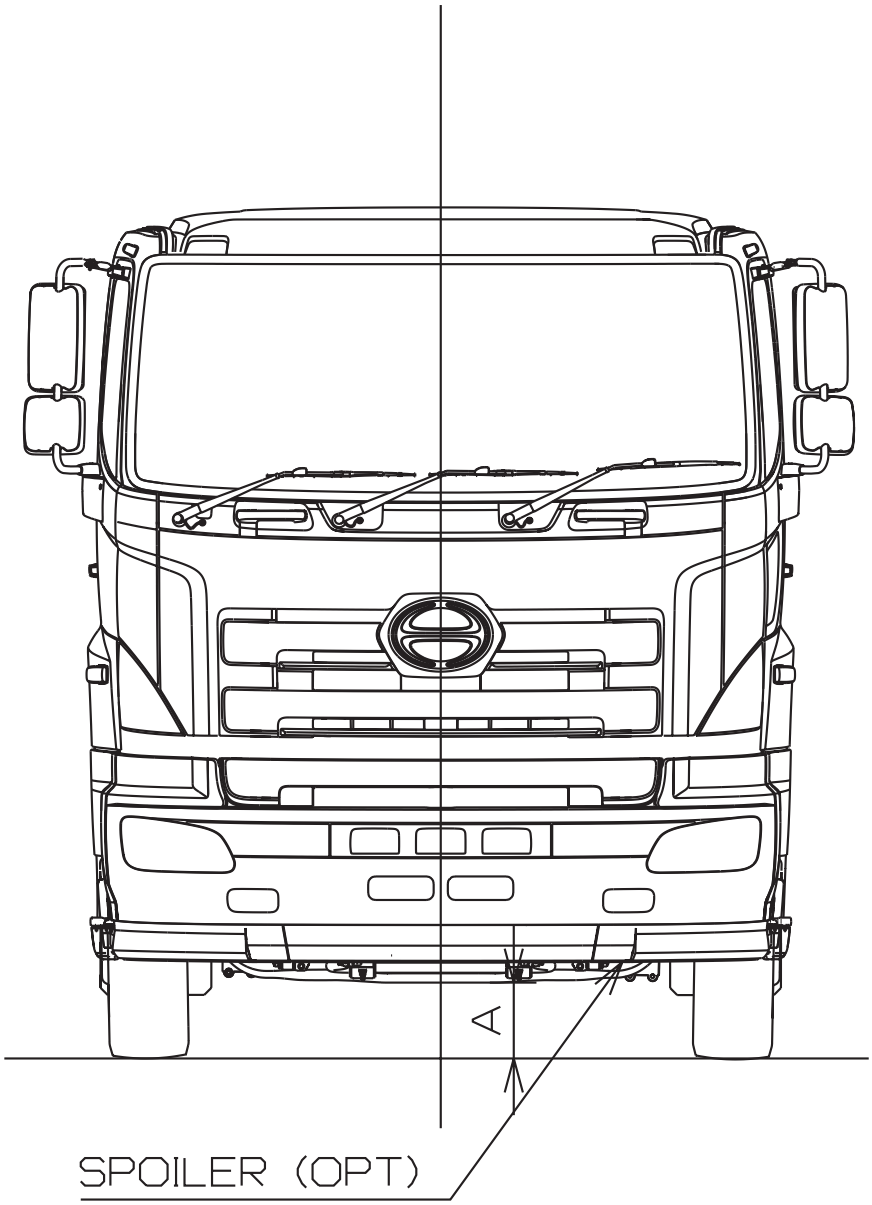


※ Marked "A" to be shown chassis drawing.

No. C-1

• Rear

Unit : mm

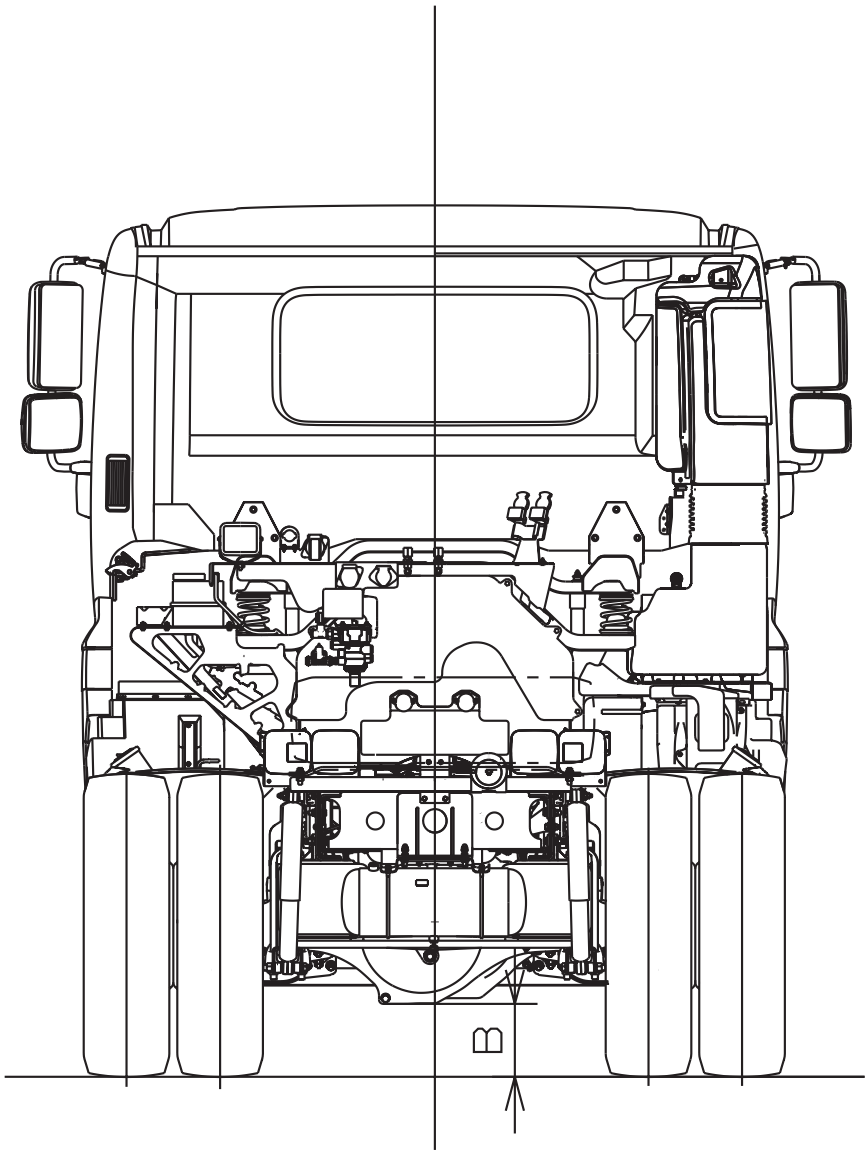


※ Marked "B" to be shown chassis drawing.

No. C-2

• Front

Unit : mm

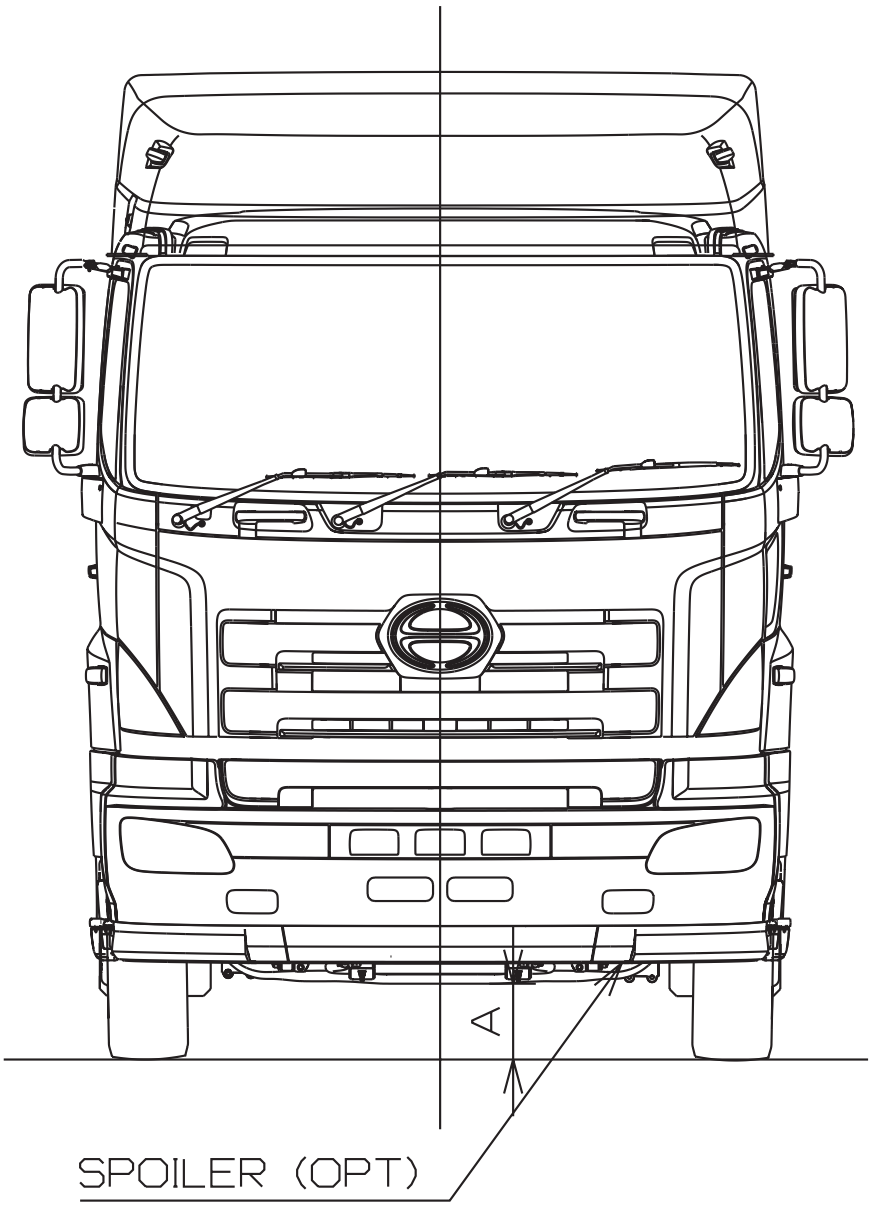


※ Marked "A" to be shown chassis drawing.

No. C-2

• Rear

Unit : mm

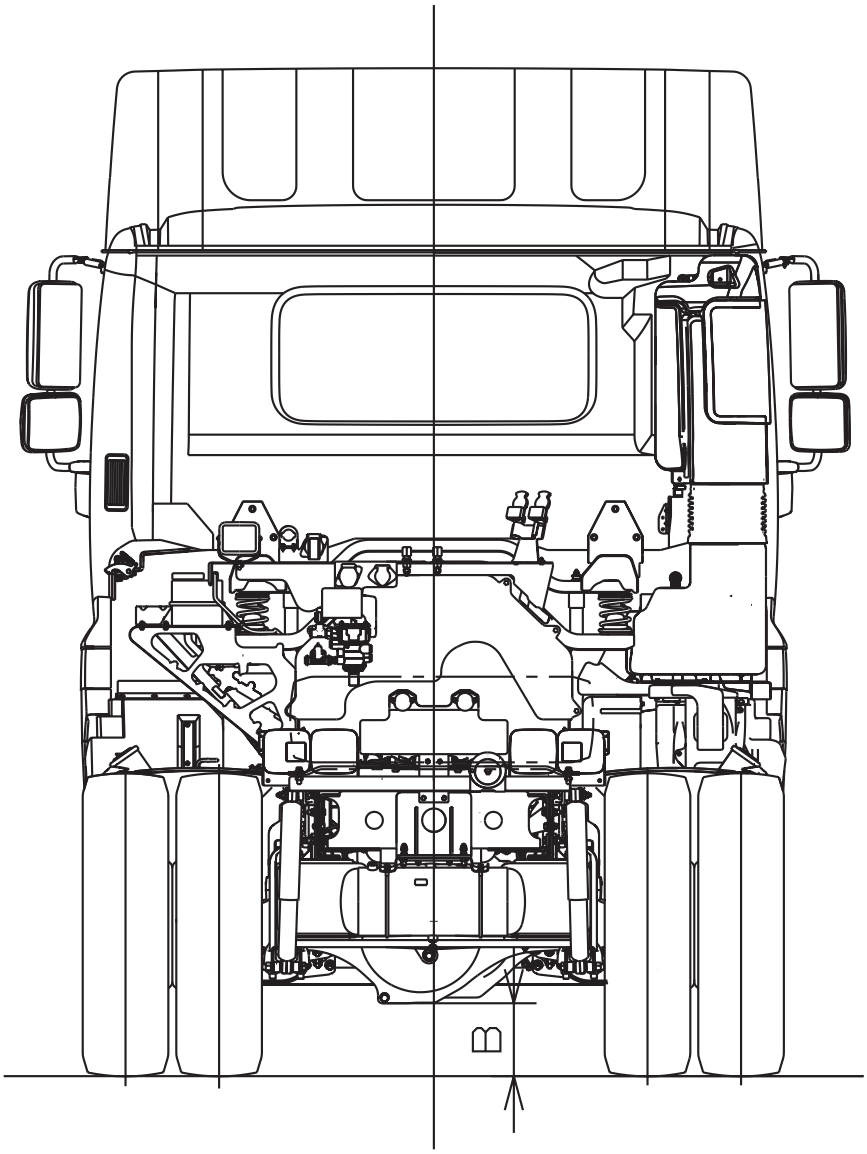


※ Marked "B" to be shown chassis drawing.

## 8.2 CAB BACK DRAWINGS

No. CB-1

• Left view

Unit : mm

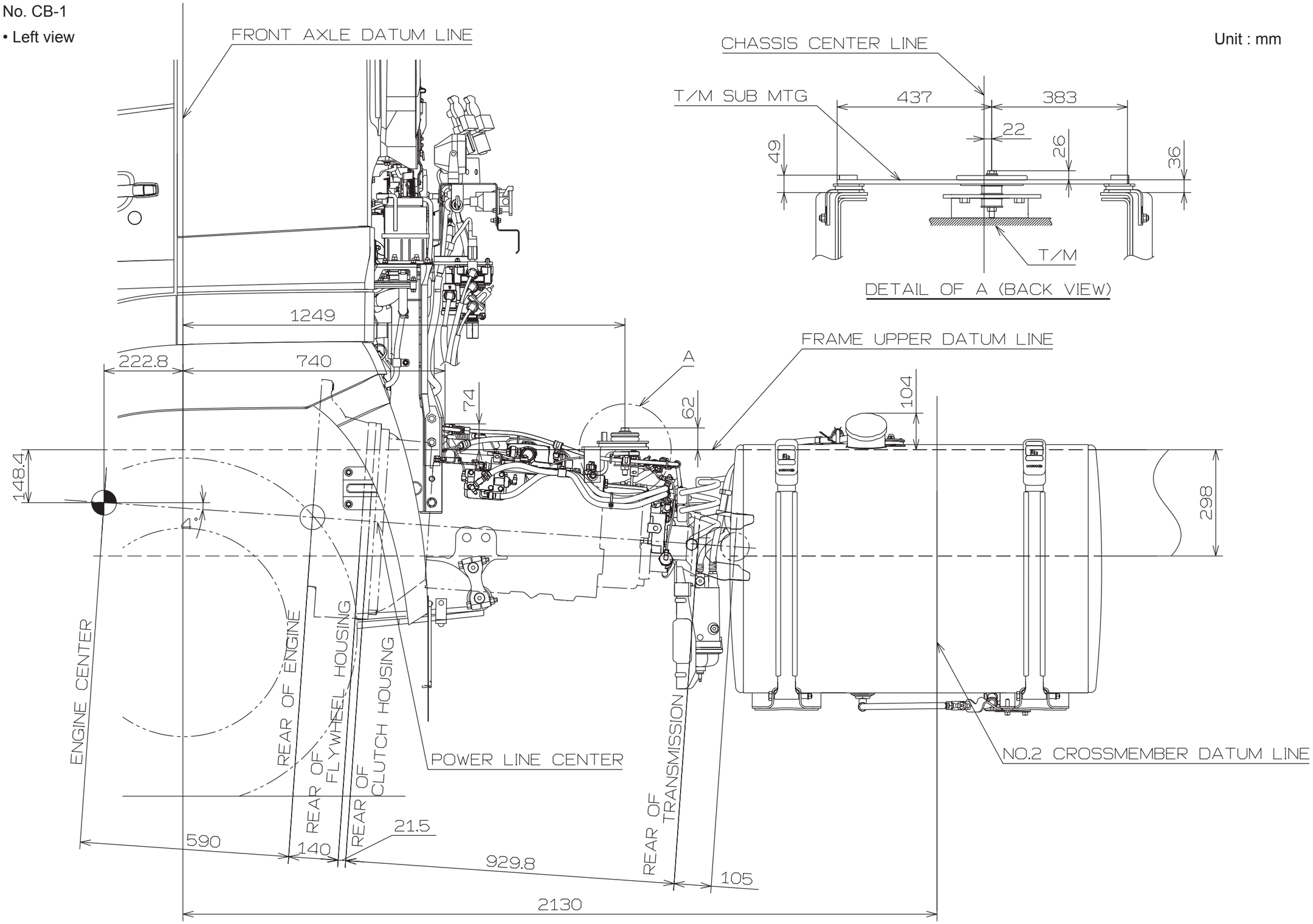

No. CB-1

• Upper view

Unit : mm

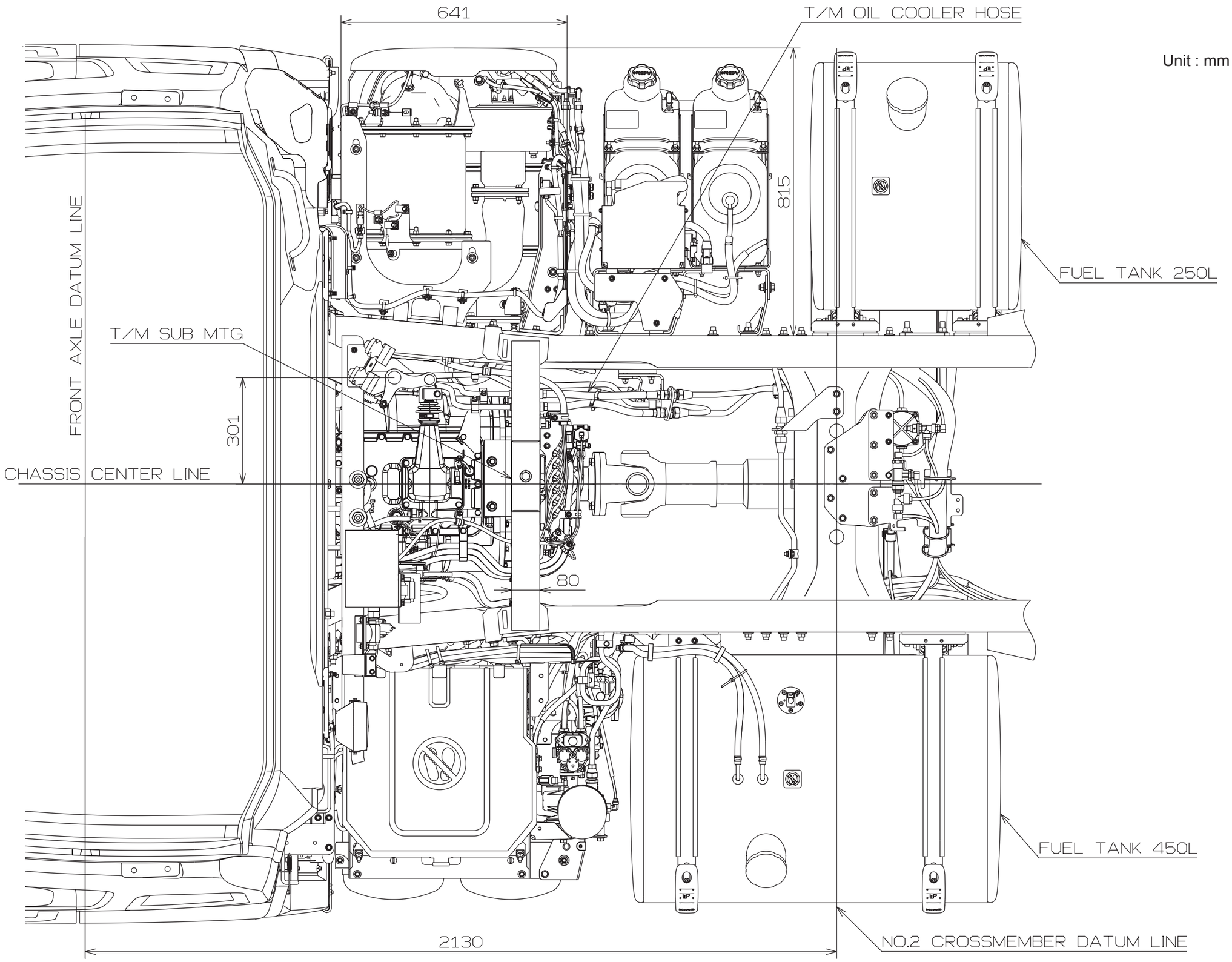

No. CB-1

• Right view

Unit : mm

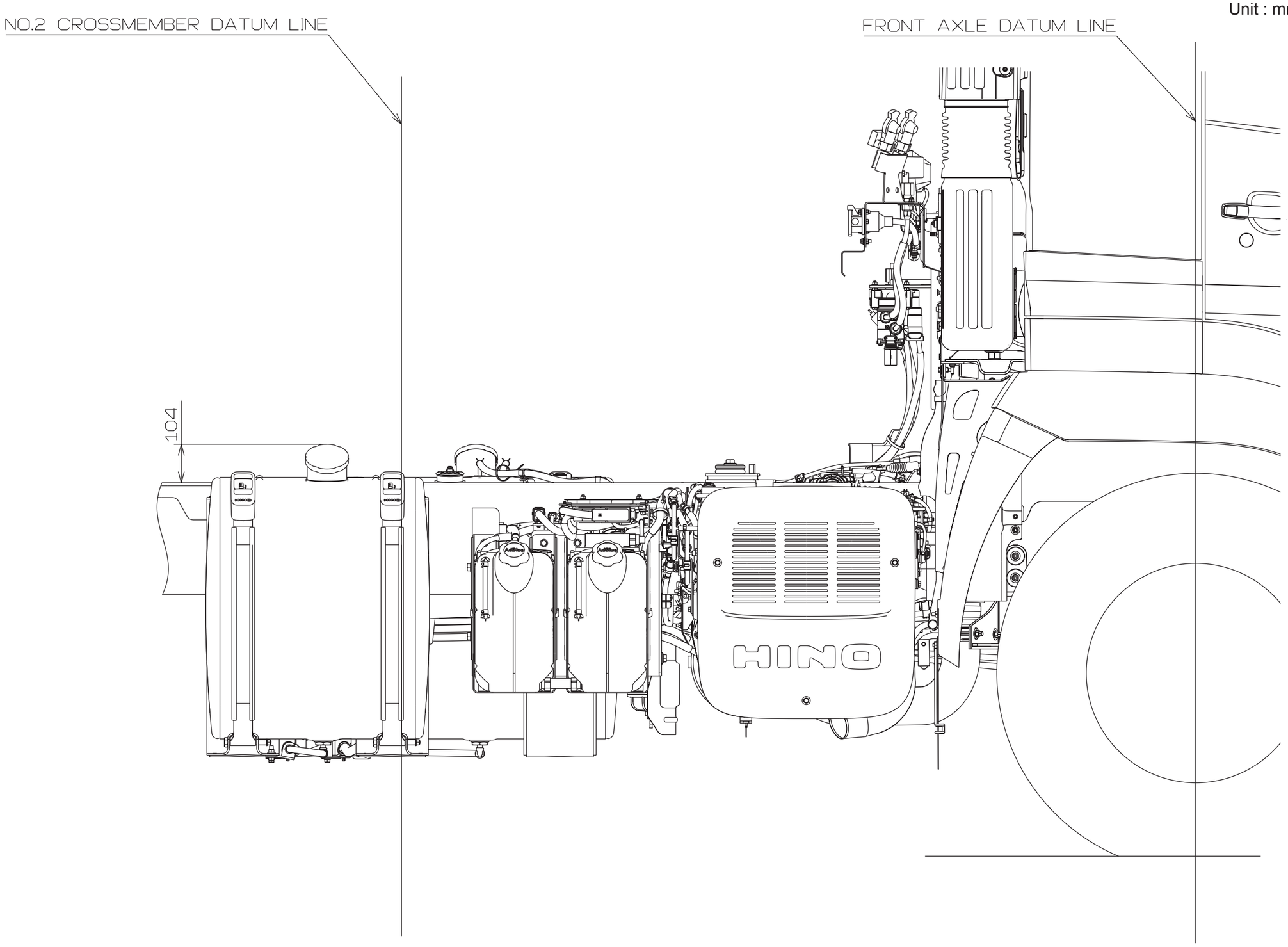

No. CB-2

• Left view

Unit : mm

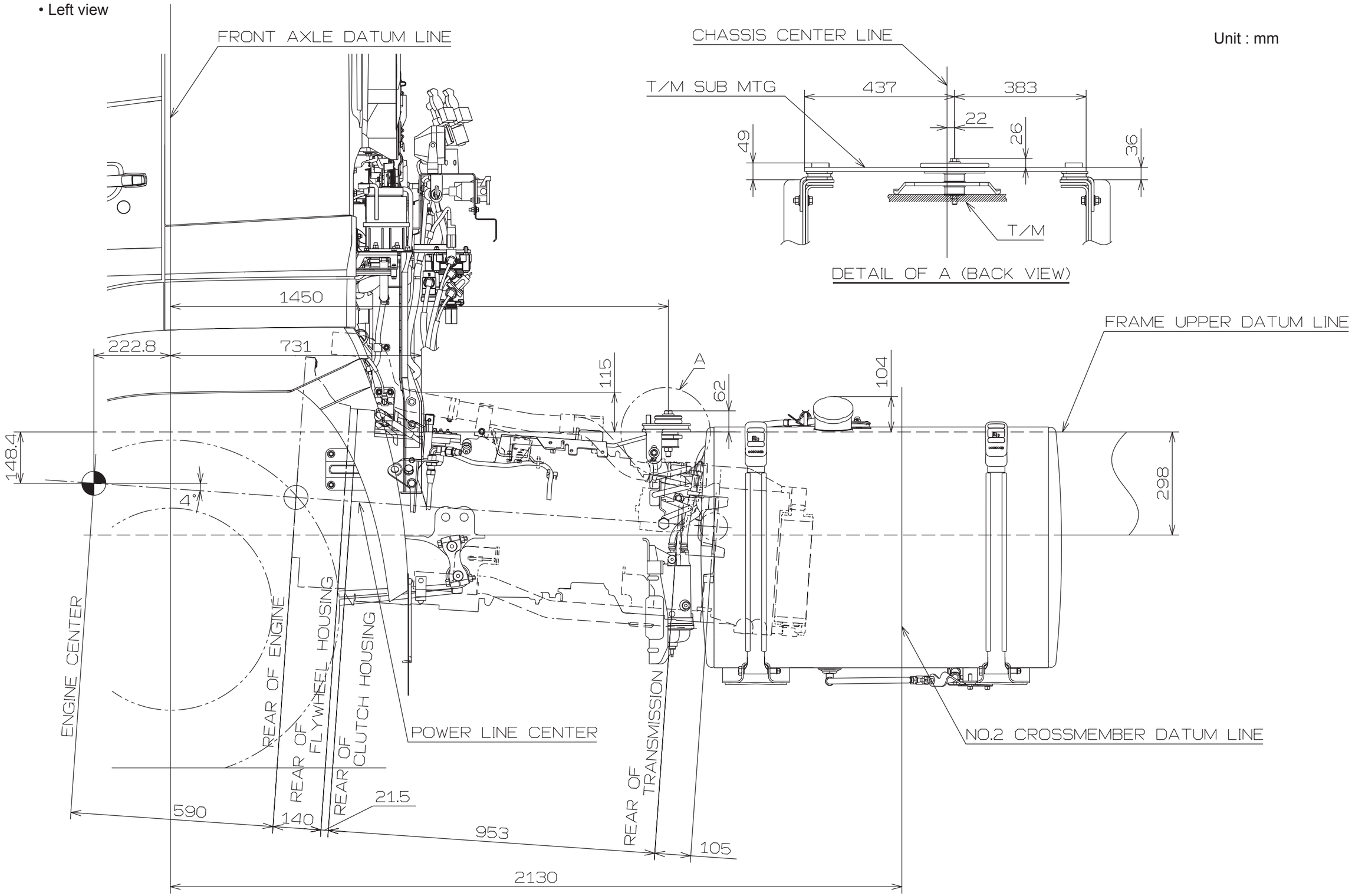

No. CB-2

• Upper view

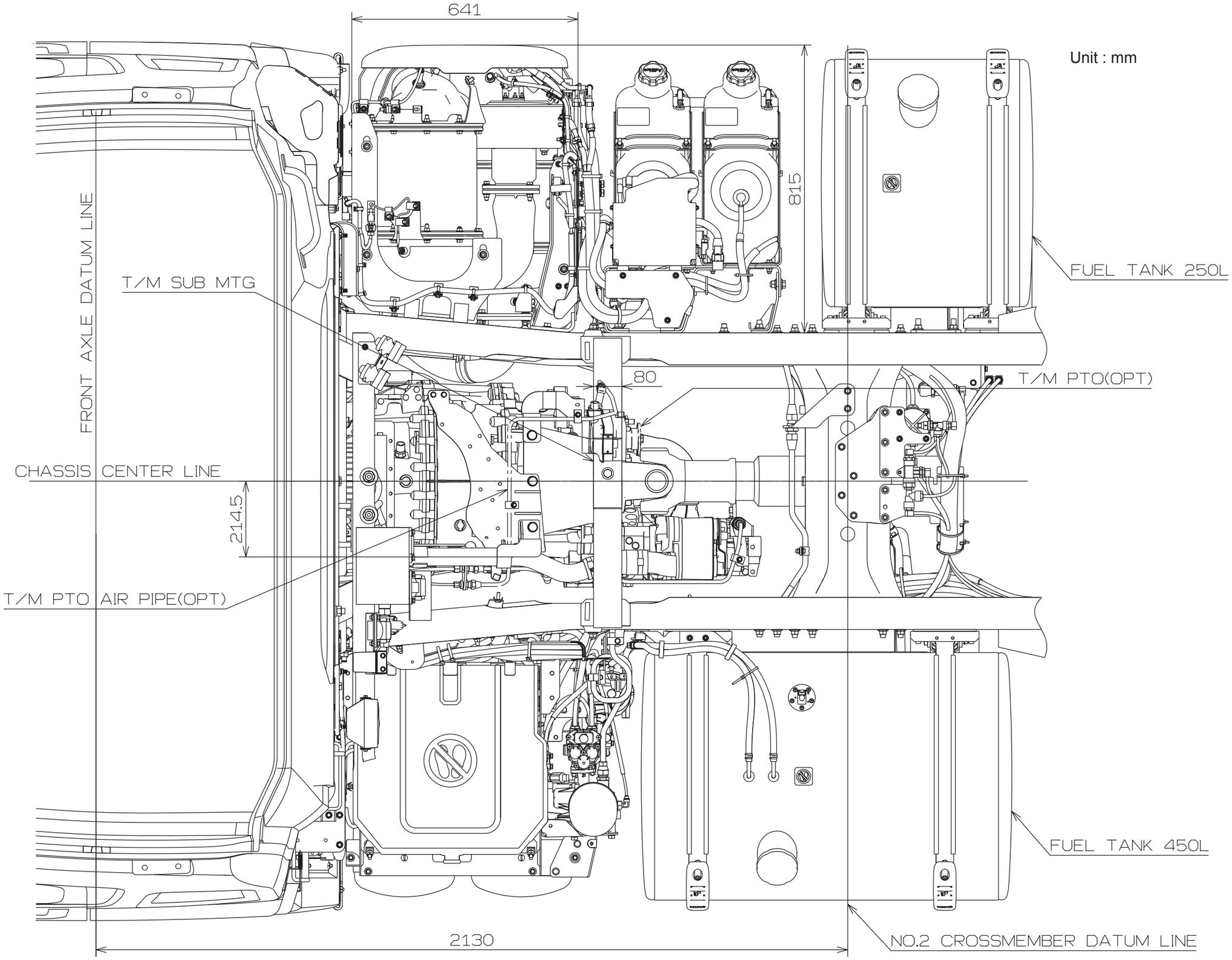

No. CB-2

• Right view

Unit : mm

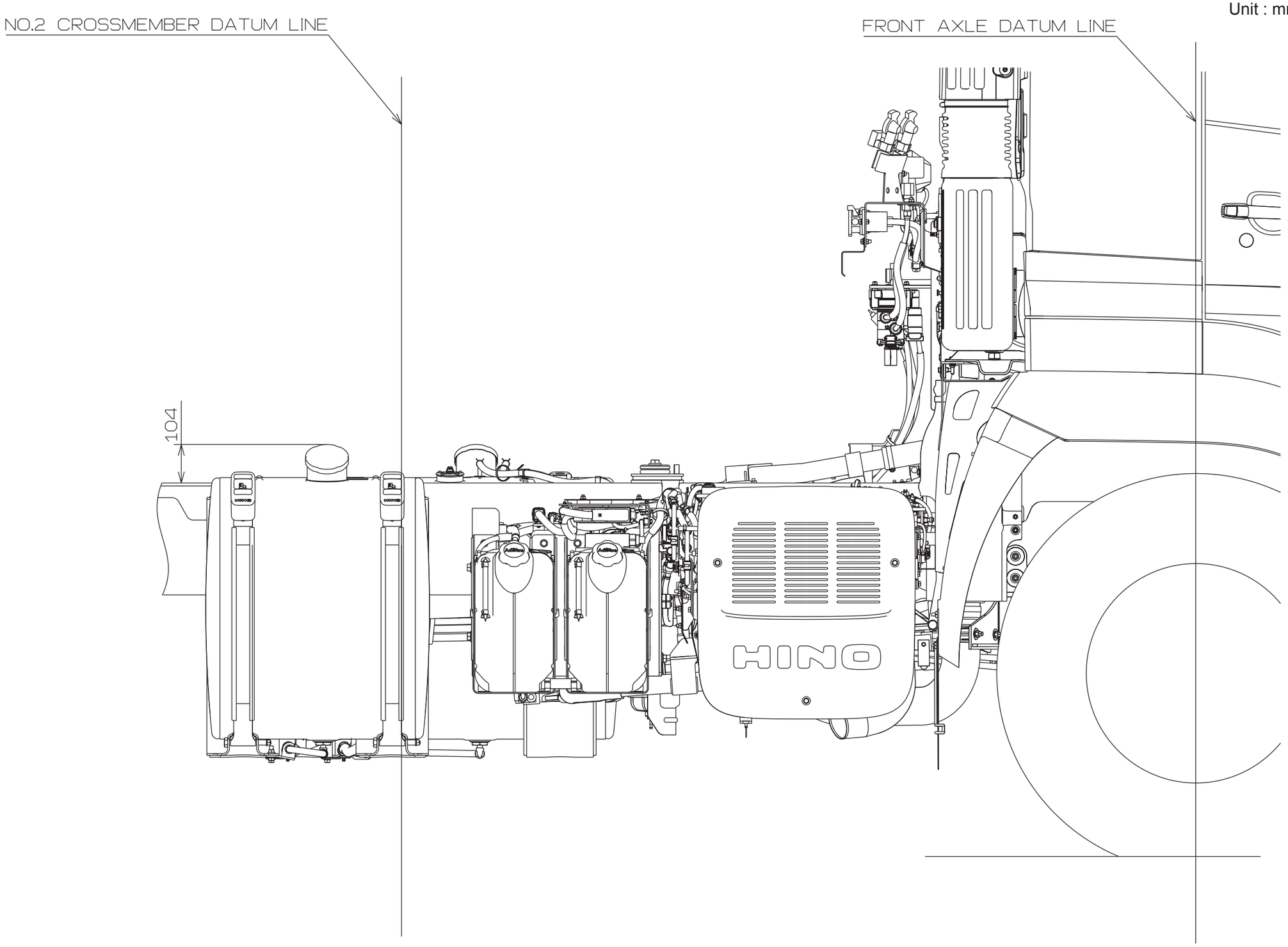

## 8.3 CAHSSIS DRAWINGS

No. CH-1

Unit : mm

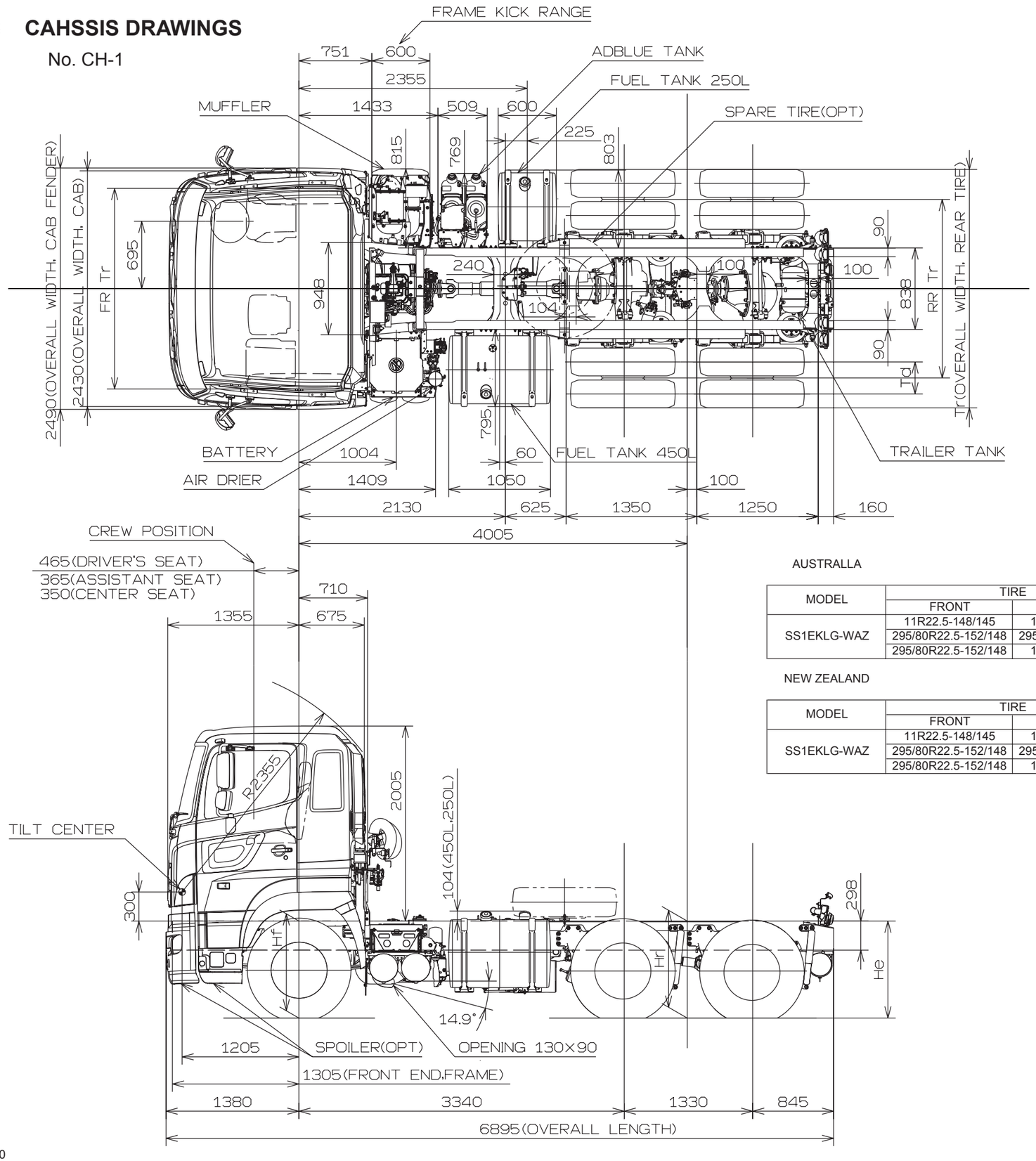


AUSTRALLA

| MODEL | TIRE | | DISC | | DIMENSIONS | | | | | | | | |
|---|---|---|---|---|---|---|---|---|---|---|---|---|---|
| | FRONT | REAR | FRONT | REAR | Hf | Hr | He | A | B | FR Tr | RR Tr | Td | Tr |
| SS1EKLG-WAZ | 11R22.5-148/145 | 11R22.5-148/145 | 22.5X8.25-165 | 22.5X8.25-165 | 991 | 1043 | 1062 | 261 | 212 | 2050 | 1840 | 330 | 2449 |
| | 295/80R22.5-152/148 | 295/80R22.5-152/148 | 22.5X8.25-165 | 22.5X8.25-165 | 991 | 1039 | 1058 | 256 | 207 | 2050 | 1840 | 330 | 2468 |
| | 295/80R22.5-152/148 | 11R22.5-148/145 | 22.5X8.25-165 | 22.5X8.25-165 | 991 | 1043 | 1062 | 256 | 212 | 2050 | 1840 | 330 | 2449 |

NEW ZEALAND

| MODEL | TIRE | | DISC | | DIMENSIONS | | | | | | | | |
|---|---|---|---|---|---|---|---|---|---|---|---|---|---|
| | FRONT | REAR | FRONT | REAR | Hf | Hr | He | A | B | FR Tr | RR Tr | Td | Tr |
| SS1EKLG-WAZ | 11R22.5-148/145 | 11R22.5-148/145 | 22.5X8.25-165 | 22.5X8.25-165 | 991 | 1042 | 1057 | 261 | 212 | 2050 | 1840 | 330 | 2449 |
| | 295/80R22.5-152/148 | 295/80R22.5-152/148 | 22.5X8.25-165 | 22.5X8.25-165 | 991 | 1039 | 1056 | 256 | 207 | 2050 | 1840 | 330 | 2468 |
| | 295/80R22.5-152/148 | 11R22.5-148/145 | 22.5X8.25-165 | 22.5X8.25-165 | 991 | 1042 | 1057 | 256 | 212 | 2050 | 1840 | 330 | 2449 |

NOTE : 1.Figures marked " ※ "dimensions are measured in parallel with the surface of the ground.

2.The dimension of tire to be mentioned in above table shows design figure according to JATMA or ETRTO standard.

No. CH-2

Unit : mm

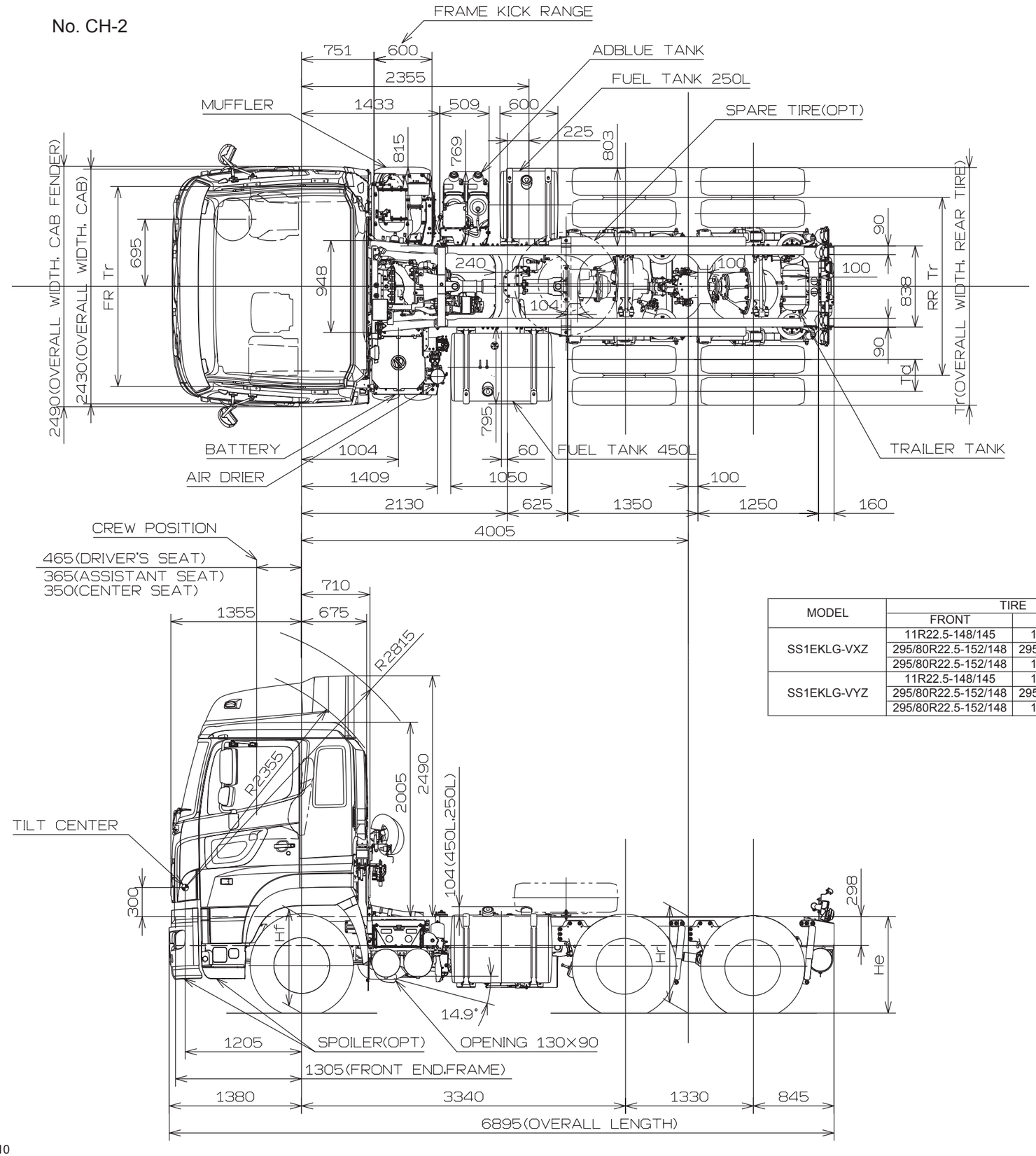


| MODEL | TIRE | | DISC | | DIMENSIONS | | | | | | | | |
|---|---|---|---|---|---|---|---|---|---|---|---|---|---|
| | FRONT | REAR | FRONT | REAR | Hf | Hr | He | A | B | FR Tr | RR Tr | Td | Tr |
| SS1EKLG-VXZ | 11R22.5-148/145 | 11R22.5-148/145 | 22.5X8.25-165 | 22.5X8.25-165 | 993 | 1042 | 1060 | 263 | 212 | 2050 | 1840 | 330 | 2449 |
| | 295/80R22.5-152/148 | 295/80R22.5-152/148 | 22.5X8.25-165 | 22.5X8.25-165 | 992 | 1039 | 1056 | 258 | 207 | 2050 | 1840 | 330 | 2468 |
| | 295/80R22.5-152/148 | 11R22.5-148/145 | 22.5X8.25-165 | 22.5X8.25-165 | 992 | 1042 | 1060 | 258 | 212 | 2050 | 1840 | 330 | 2449 |
| SS1EKLG-VYZ | 11R22.5-148/145 | 11R22.5-148/145 | 22.5X8.25-165 | 22.5X8.25-165 | 991 | 1042 | 1060 | 263 | 212 | 2050 | 1840 | 330 | 2449 |
| | 295/80R22.5-152/148 | 295/80R22.5-152/148 | 22.5X8.25-165 | 22.5X8.25-165 | 991 | 1039 | 1056 | 258 | 207 | 2050 | 1840 | 330 | 2468 |
| | 295/80R22.5-152/148 | 11R22.5-148/145 | 22.5X8.25-165 | 22.5X8.25-165 | 991 | 1042 | 1061 | 258 | 212 | 2050 | 1840 | 330 | 2449 |

NOTE : 1.Figures marked " ※ "dimensions are measured in parallel with the surface of the ground.

2.The dimension of tire to be mentioned in above table shows design figure according to JATMA or ETRTO standard.