3. CHASSIS DRAWINGS

Unit : mm

No. CH-1

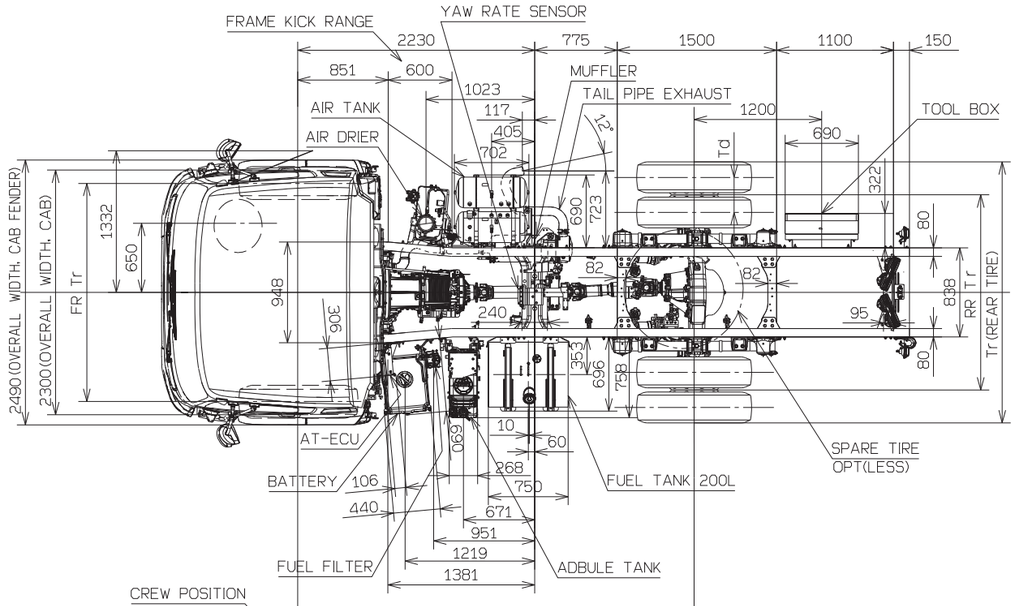

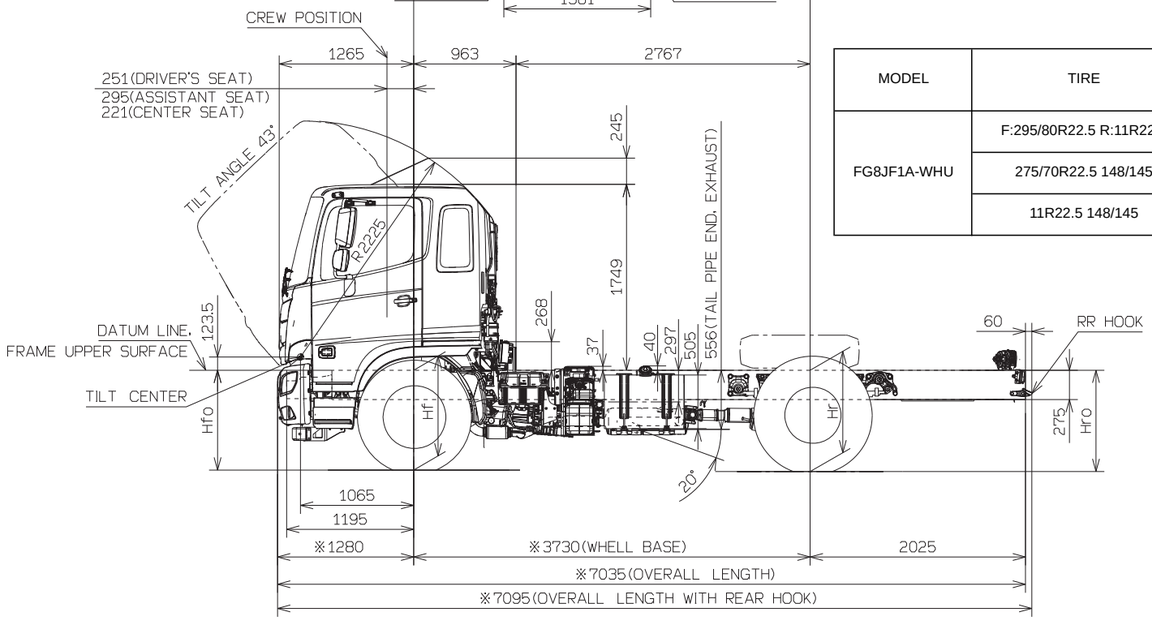

MODEL	TIRE	WHEEL	GROUND HEIGHT, FRAME UPPER SURFACE				FR Tr	RR Tr	Tr	Td
			Hf0	Hf	Hr	Hr0				
FG8JF1A-WHU	F:295/80R22.5 R:11R22.5	22.5X8.25	1000	1015	1065	1090	2050	1835	2445	330
		22.5X8.25 ALLOY	1000	1015	1065	1090	2070	1855	2465	330
	275/70R22.5 148/145	22.5X8.25	960	975	1020	1045	2050	1835	2445	330
		22.5X8.25 ALLOY	960	975	1020	1045	2070	1855	2460	330
	11R22.5 148/145	22.5X8.25	1005	1020	1065	1090	2050	1835	2445	330
		22.5X8.25 ALLOY	1005	1020	1065	1090	2070	1855	2465	330

NOTE: 1.Figures marked "※" dimensions are measured in parallel with the surface of the ground.
2.The dimension of tire to be mentioned in above table shows design figure according to JATMA or ETRTO standard.

No. CH-1

Unit : mm

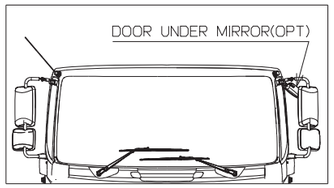

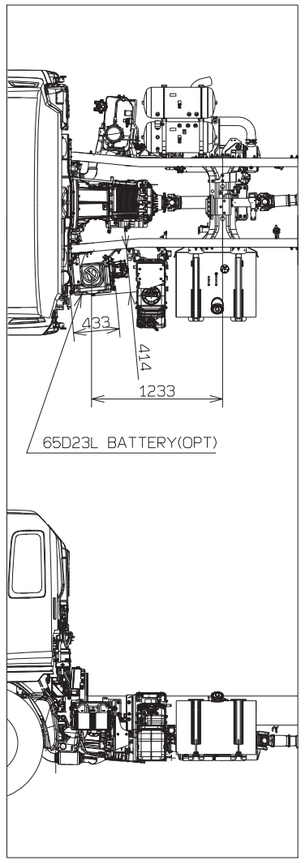

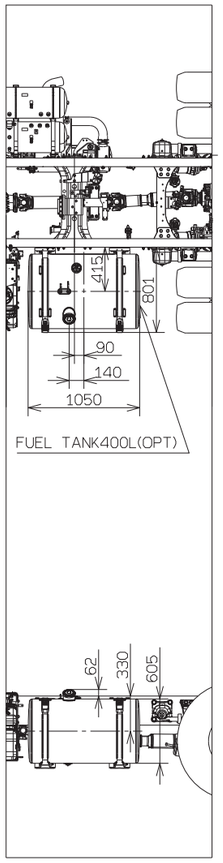

No. CH-2

Unit : mm

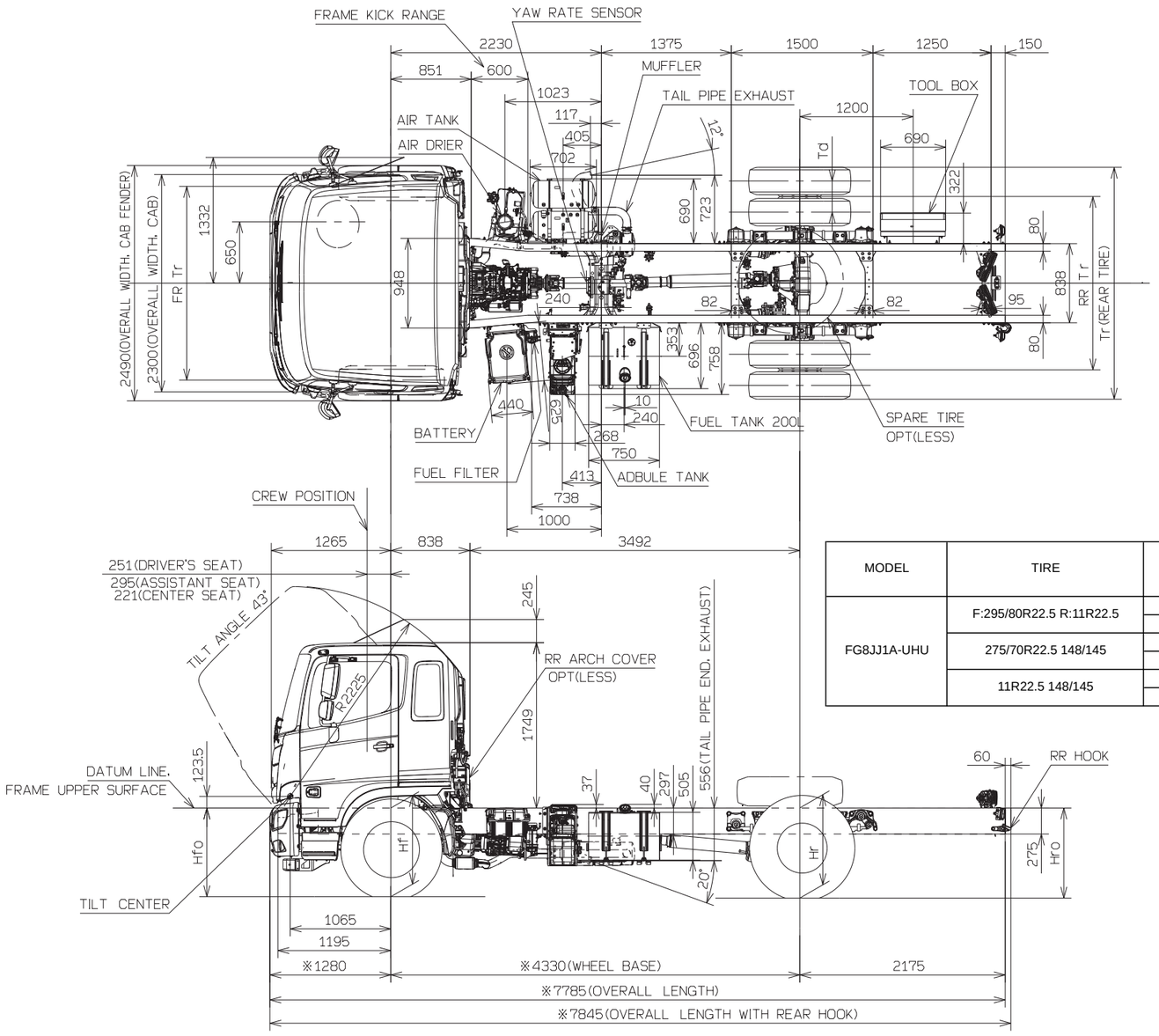

MODEL	TIRE	WHEEL	GROUND HEIGHT, FRAME UPPER SURFACE				FR Tr	RR Tr	Tr	Td
			Hf0	Hf	Hr	Hr0				
FG8JJ1A-UHU	F:295/80R22.5 R:11R22.5	22.5X8.25	995	1010	1065	1095	2050	1835	2445	330
		22.5X8.25 ALLOY	995	1010	1065	1095	2070	1855	2465	330
	275/70R22.5 148/145	22.5X8.25	955	970	1020	1045	2050	1835	2445	330
		22.5X8.25 ALLOY	955	970	1020	1045	2070	1855	2460	330
	11R22.5 148/145	22.5X8.25	1000	1015	1065	1090	2050	1835	2445	330
		22.5X8.25 ALLOY	1000	1015	1065	1090	2070	1855	2465	330

NOTE: 1.Figures marked "※" dimensions are measured in parallel with the surface of the ground.
2.The dimension of tire to be mentioned in above table shows design figure according to JATMA or ETRTO standard.

No. CH-2

Unit : mm

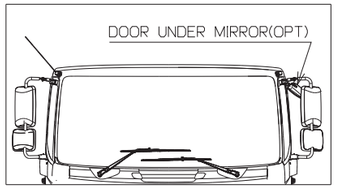

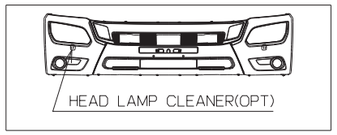

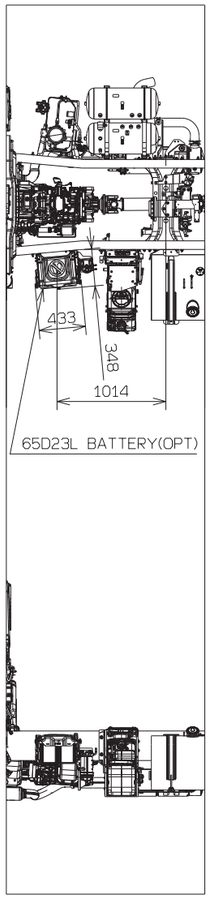

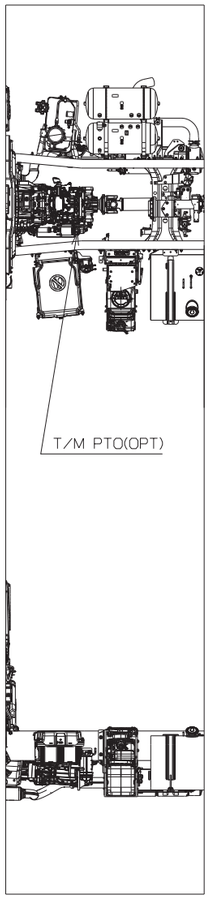

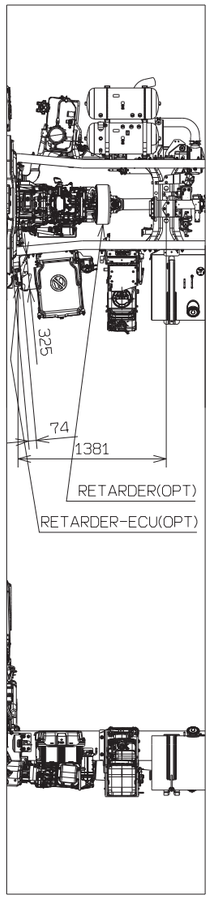

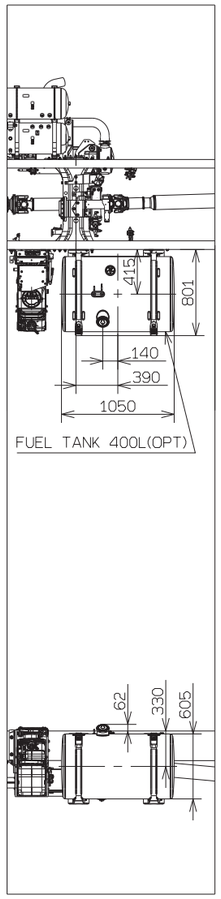

No. CH-3

Unit : mm

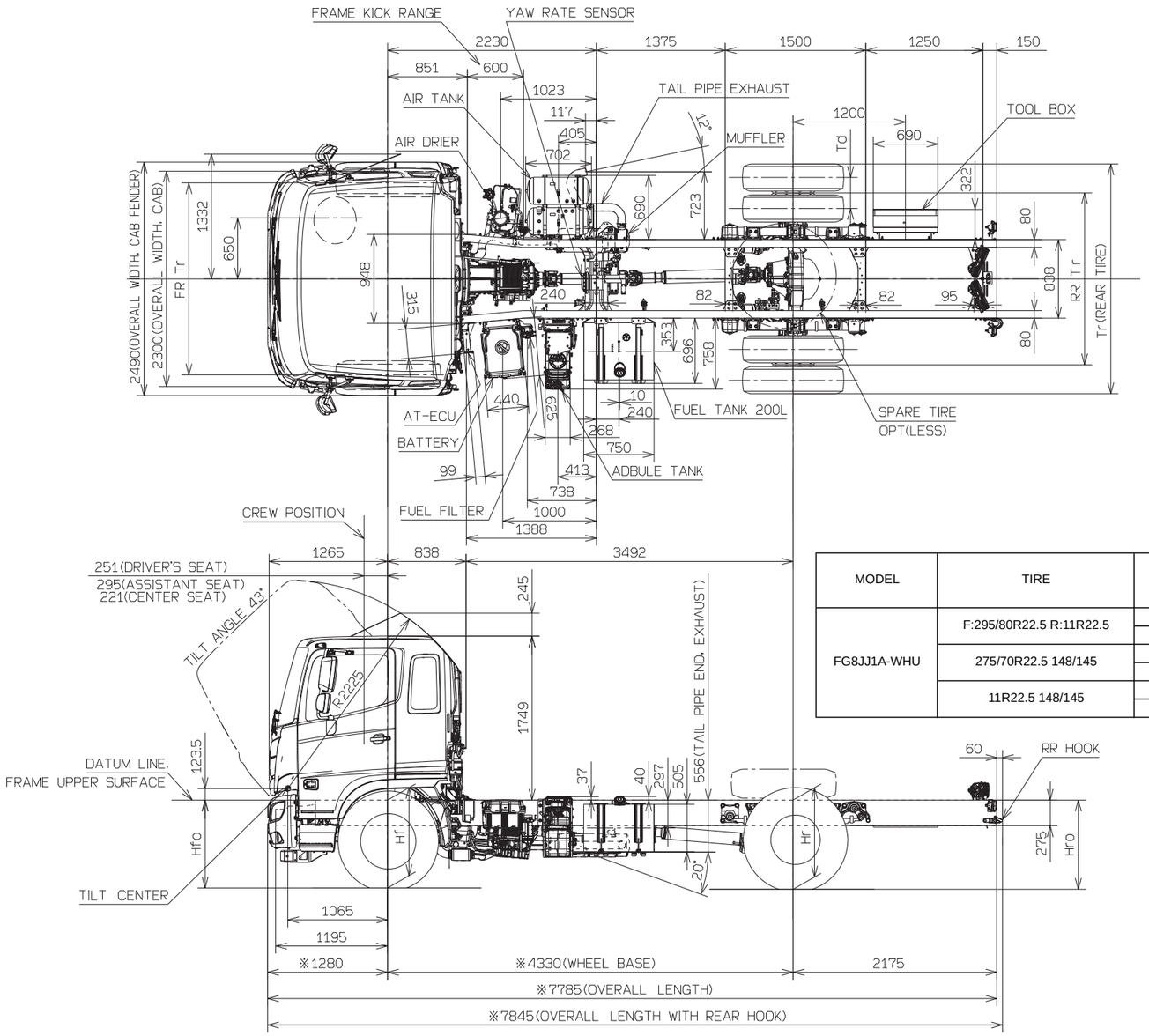

MODEL	TIRE	WHEEL	GROUND HEIGHT, FRAME UPPER SURFACE				FR Tr	RR Tr	Tr	Td
			Hf0	Hf	Hr	Hr0				
FG8JJ1A-WHU	F:295/80R22.5 R:11R22.5	22.5X8.25	995	1010	1065	1095	2050	1835	2445	330
		22.5X8.25 ALLOY	995	1010	1065	1095	2070	1855	2465	330
	275/70R22.5 148/145	22.5X8.25	955	970	1020	1045	2050	1835	2445	330
		22.5X8.25 ALLOY	955	970	1020	1045	2070	1855	2460	330
	11R22.5 148/145	22.5X8.25	1000	1015	1065	1090	2050	1835	2445	330
		22.5X8.25 ALLOY	1000	1015	1065	1090	2070	1855	2465	330

NOTE: 1.Figures marked "※" dimensions are measured in parallel with the surface of the ground.
2.The dimension of tire to be mentioned in above table shows design figure according to JATMA or ETRTO standard.

No. CH-3

Unit : mm

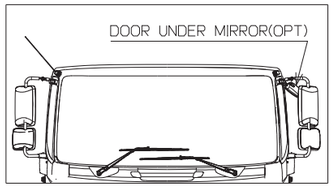

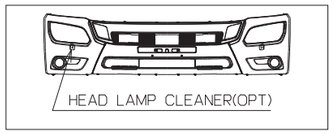

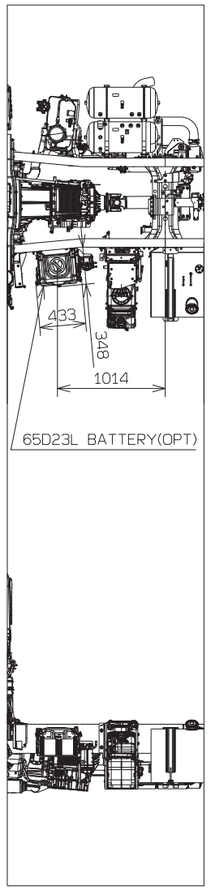

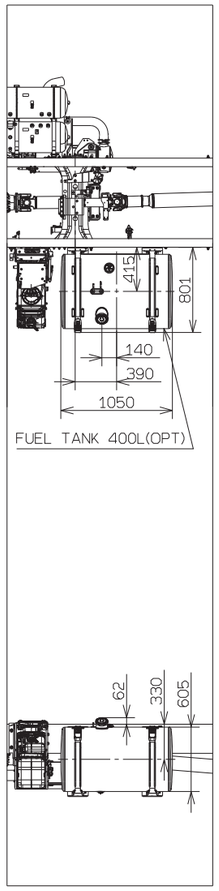

No. CH-4

Unit : mm

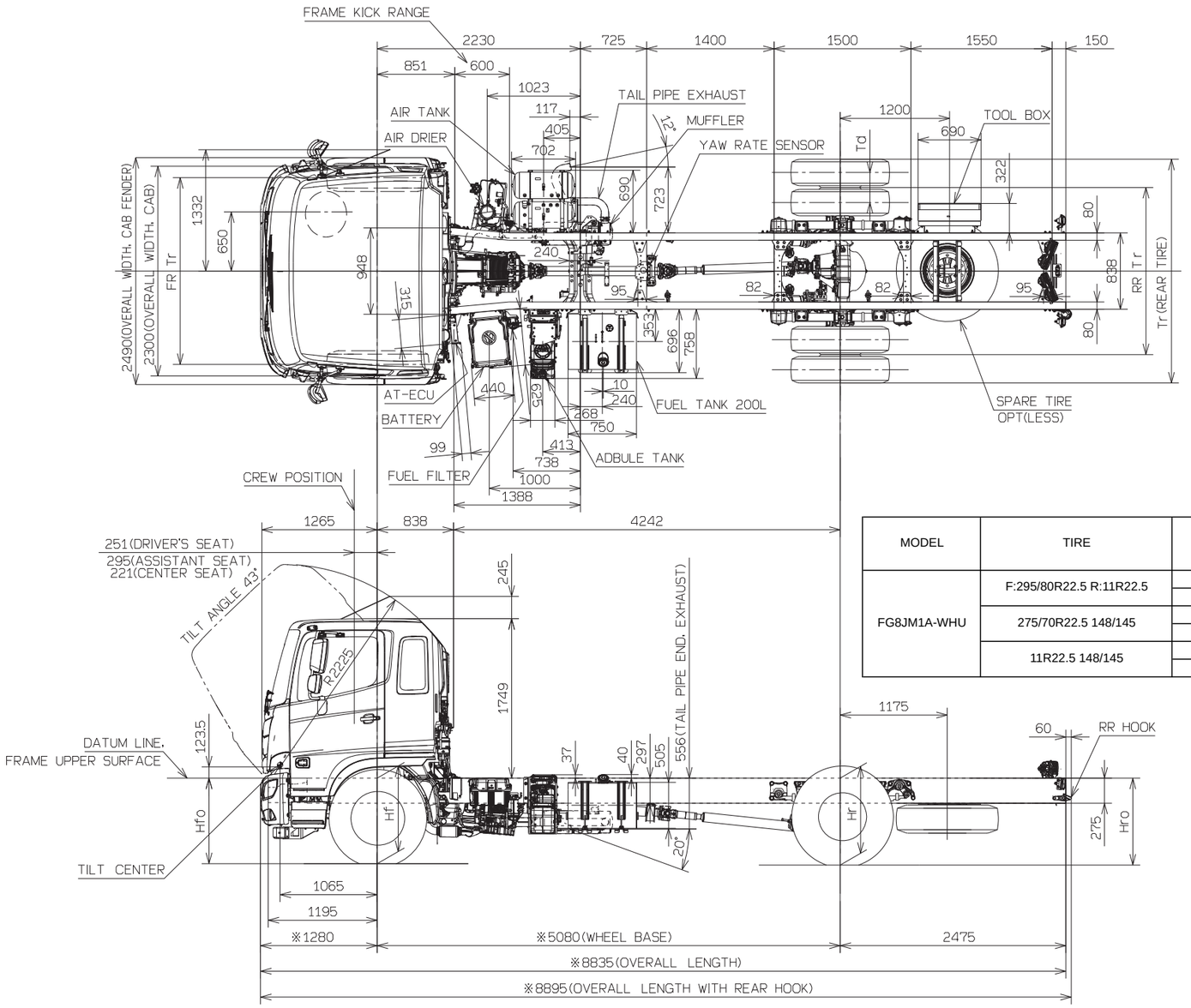

MODEL	TIRE	WHEEL	GROUND HEIGHT, FRAME UPPER SURFACE				FR Tr	RR Tr	Tr	Td
			Hf0	Hf	Hr	Hr0				
FG8JM1A-WHU	F:295/80R22.5 R:11R22.5	22.5X8.25	1000	1010	1050	1070	2050	1835	2445	330
		22.5X8.25 ALLOY	1000	1010	1050	1070	2070	1855	2465	330
	275/70R22.5 148/145	22.5X8.25	960	970	1005	1020	2050	1835	2445	330
		22.5X8.25 ALLOY	960	970	1005	1020	2070	1855	2460	330
	11R22.5 148/145	22.5X8.25	1005	1015	1050	1065	2050	1835	2445	330
		22.5X8.25 ALLOY	1005	1015	1050	1065	2070	1855	2465	330

NOTE: 1.Figures marked "※" dimensions are measured in parallel with the surface of the ground.
2.The dimension of tire to be mentioned in above table shows design figure according to JATMA or ETRTO standard.

No. CH-4

Unit : mm

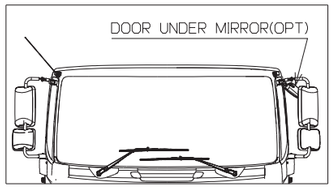

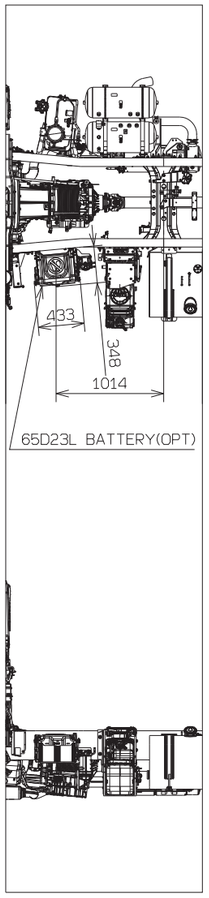

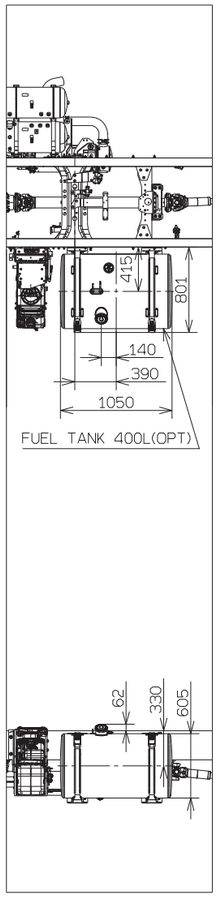

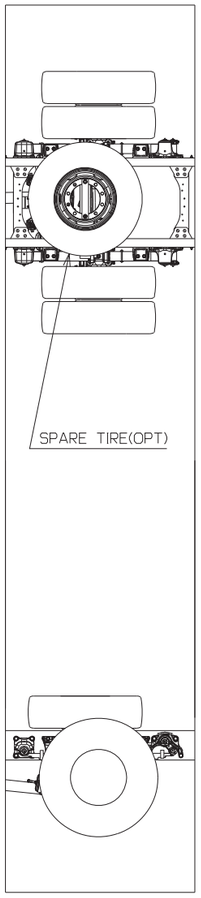

No. CH-5

Unit : mm

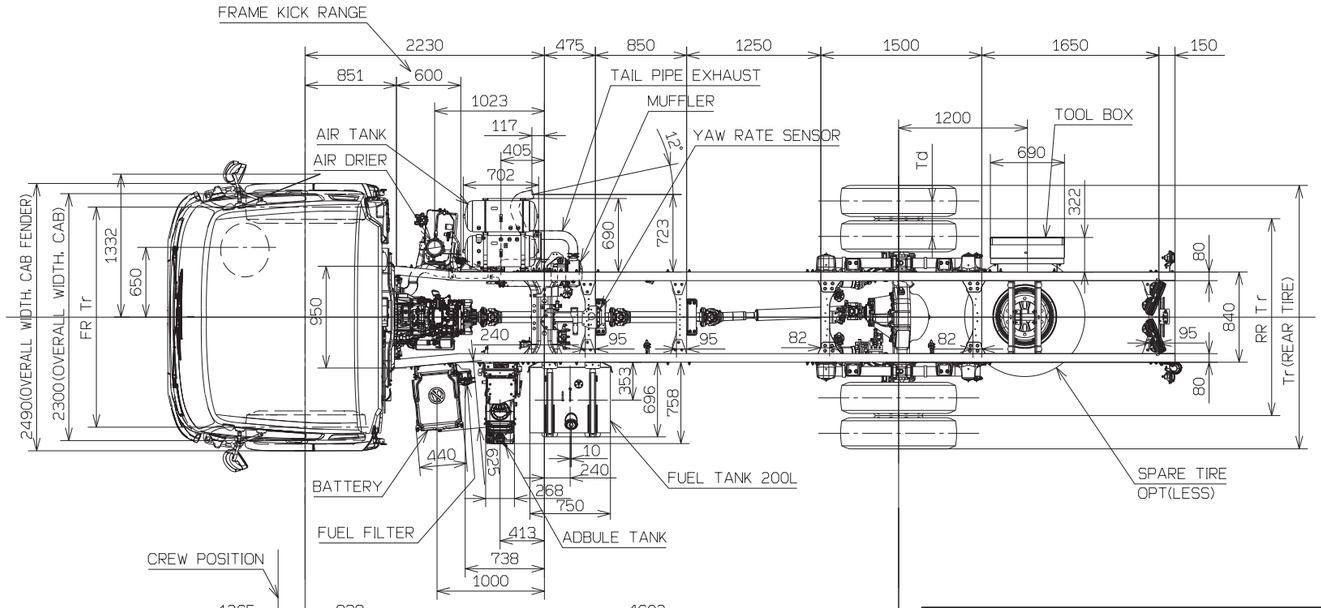

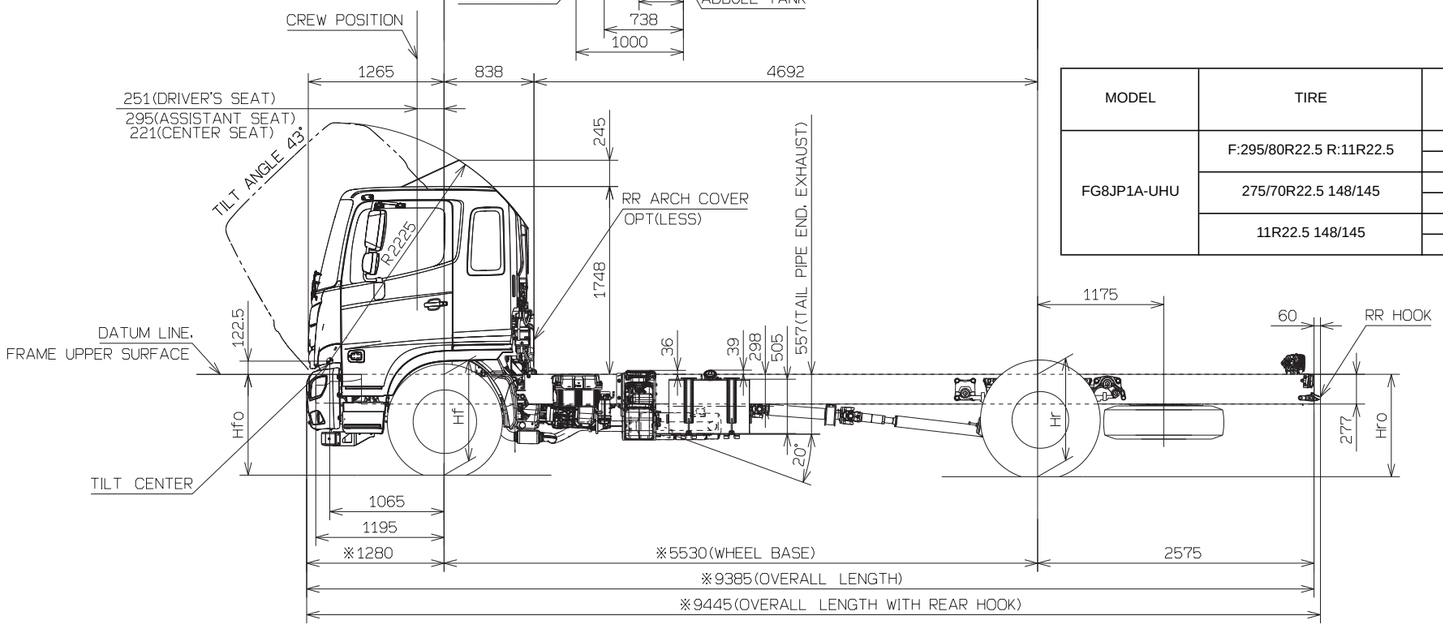

MODEL	TIRE	WHEEL	GROUND HEIGHT, FRAME UPPER SURFACE				FR Tr	RR Tr	Tr	Td
			Hf0	Hf	Hr	Hr0				
FG8JP1A-UHU	F:295/80R22.5 R:11R22.5	22.5X8.25	1000	1010	1050	1070	2050	1835	2445	330
		22.5X8.25 ALLOY	1000	1010	1050	1070	2070	1855	2465	330
	275/70R22.5 148/145	22.5X8.25	960	970	1005	1020	2050	1835	2445	330
		22.5X8.25 ALLOY	960	970	1005	1020	2070	1855	2460	330
	11R22.5 148/145	22.5X8.25	1005	1015	1050	1065	2050	1835	2445	330
		22.5X8.25 ALLOY	1005	1015	1050	1065	2070	1855	2465	330

NOTE: 1.Figures marked "※" dimensions are measured in parallel with the surface of the ground.
2.The dimension of tire to be mentioned in above table shows design figure according to JATMA or ETRTO standard.

No. CH-5

Unit : mm

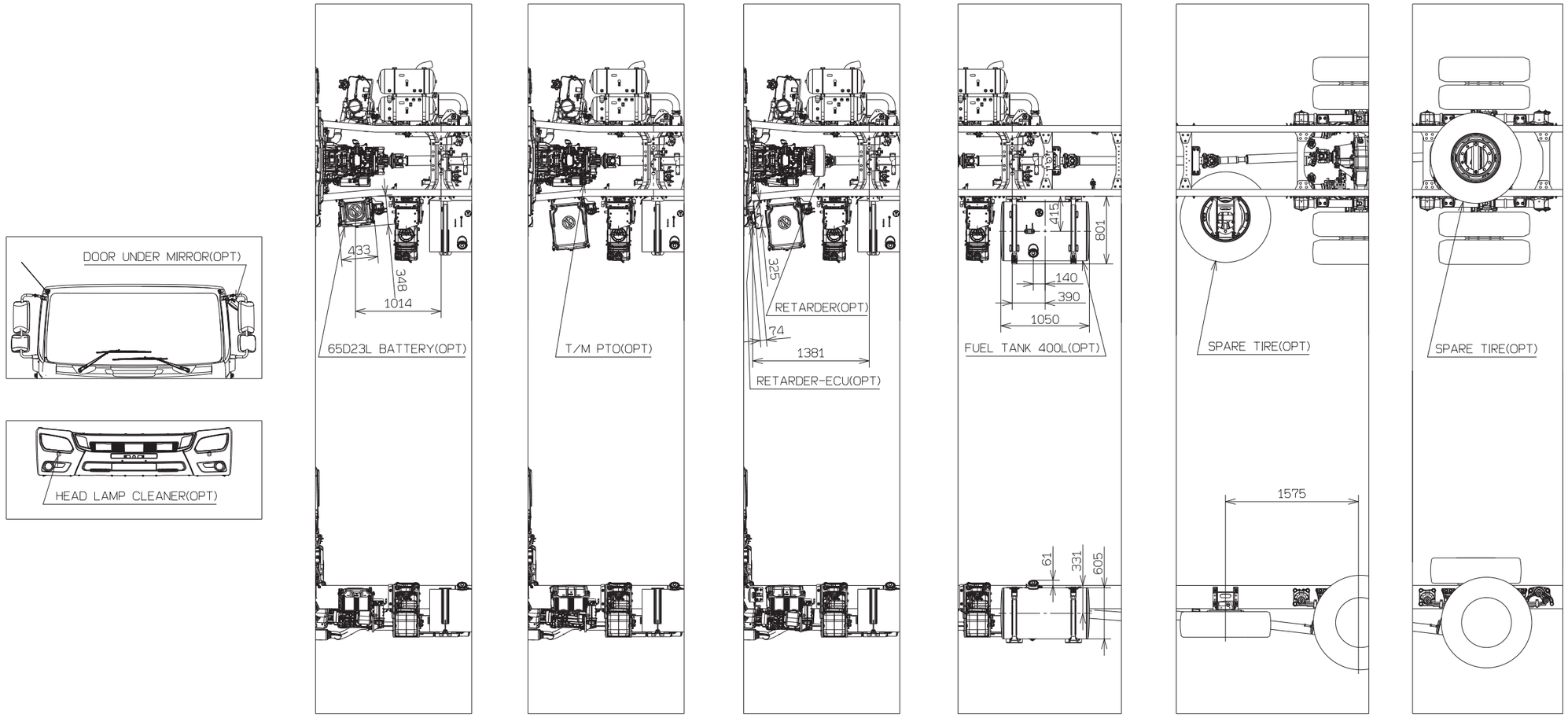

No. CH-6

Unit : mm

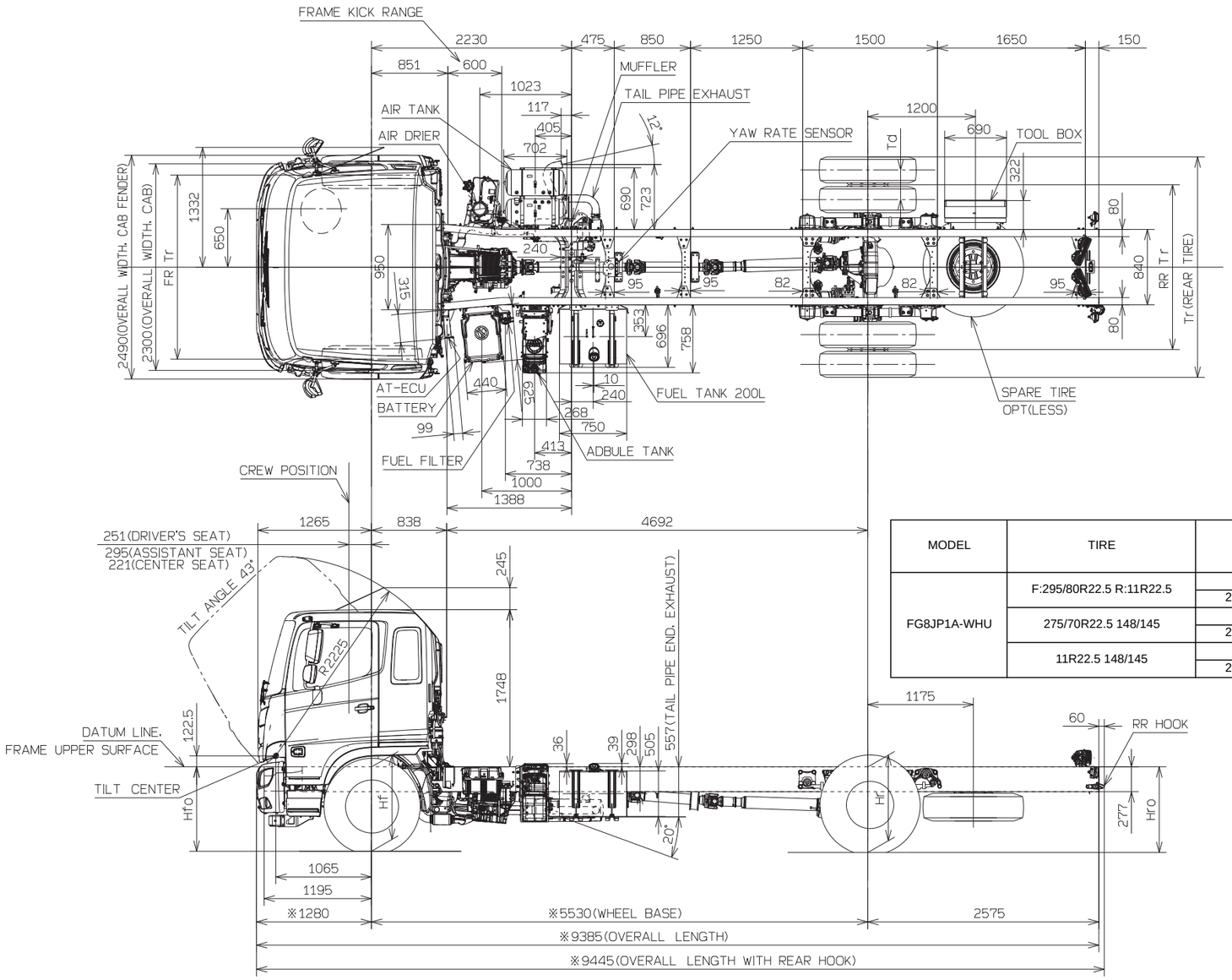

MODEL	TIRE	WHEEL	GROUND HEIGHT, FRAME UPPER SURFACE				FR Tr	RR Tr	Tr	Td
			Hf0	Hf	Hr	Hr0				
FG8JP1A-WHU	F:295/80R22.5 R:11R22.5	22.5X8.25	1000	1010	1050	1070	2050	1835	2445	330
		22.5X8.25 ALLOY	1000	1010	1050	1070	2070	1855	2465	330
	275/70R22.5 148/145	22.5X8.25	960	970	1005	1020	2050	1835	2445	330
		22.5X8.25 ALLOY	960	970	1005	1020	2070	1855	2460	330
	11R22.5 148/145	22.5X8.25	1005	1015	1050	1065	2050	1835	2445	330
		22.5X8.25 ALLOY	1005	1015	1050	1065	2070	1855	2465	330

NOTE: 1.Figures marked "※" dimensions are measured in parallel with the surface of the ground.
2.The dimension of tire to be mentioned in above table shows design figure according to JATMA or ETRTO standard.

No. CH-6

Unit : mm

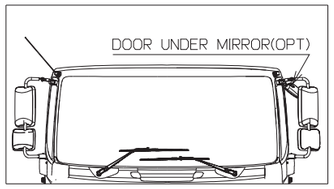

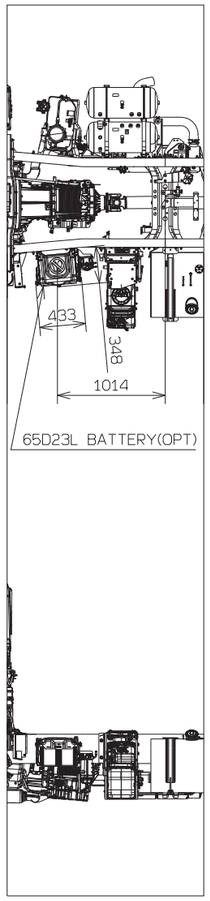

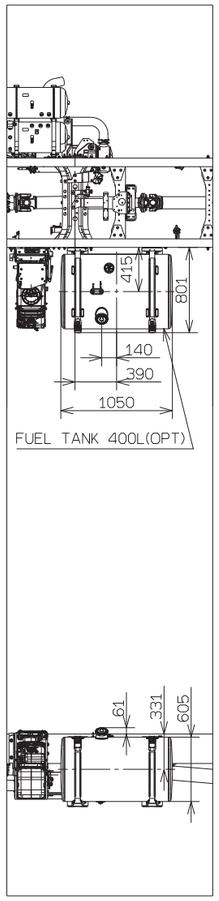

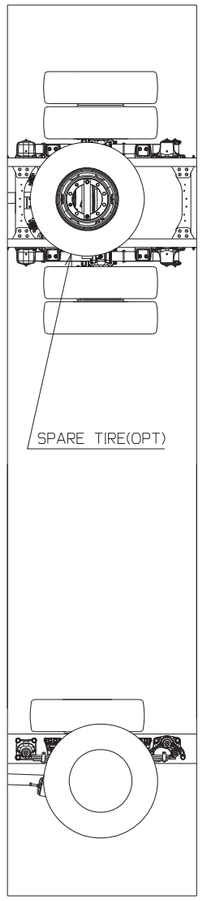

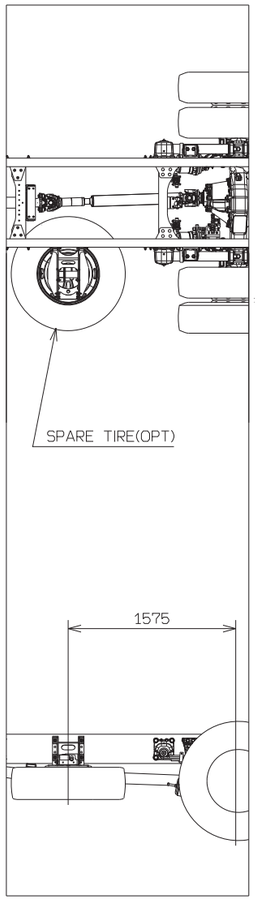

No. CH-7

Unit : mm

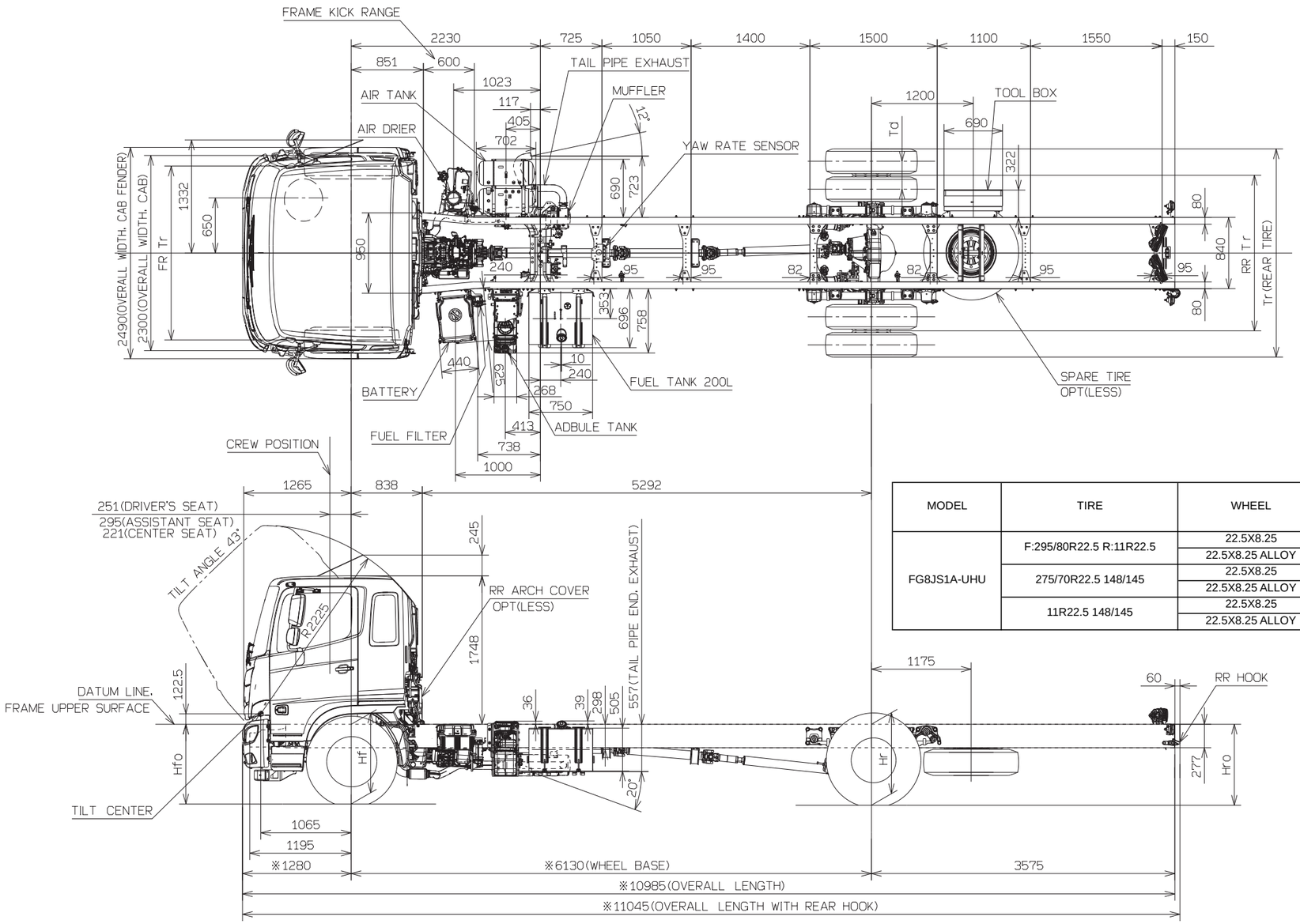

MODEL	TIRE	WHEEL	GROUND HEIGHT, FRAME UPPER SURFACE				FR Tr	RR Tr	Tr	Td
			Hf0	Hf	Hr	Hr0				
FG8JS1A-UHU	F:295/80R22.5 R:11R22.5	22.5X8.25	1000	1010	1050	1075	2050	1835	2445	330
		22.5X8.25 ALLOY	1000	1010	1050	1075	2070	1855	2465	330
	275/70R22.5 148/145	22.5X8.25	965	970	1005	1025	2050	1835	2445	330
		22.5X8.25 ALLOY	965	970	1005	1025	2070	1855	2460	330
	11R22.5 148/145	22.5X8.25	1010	1015	1050	1070	2050	1835	2445	330
		22.5X8.25 ALLOY	1010	1015	1050	1070	2070	1855	2465	330

NOTE: 1.Figures marked "※" dimensions are measured in parallel with the surface of the ground.
2.The dimension of tire to be mentioned in above table shows design figure according to JATMA or ETRTO standard.

No. CH-7

Unit : mm

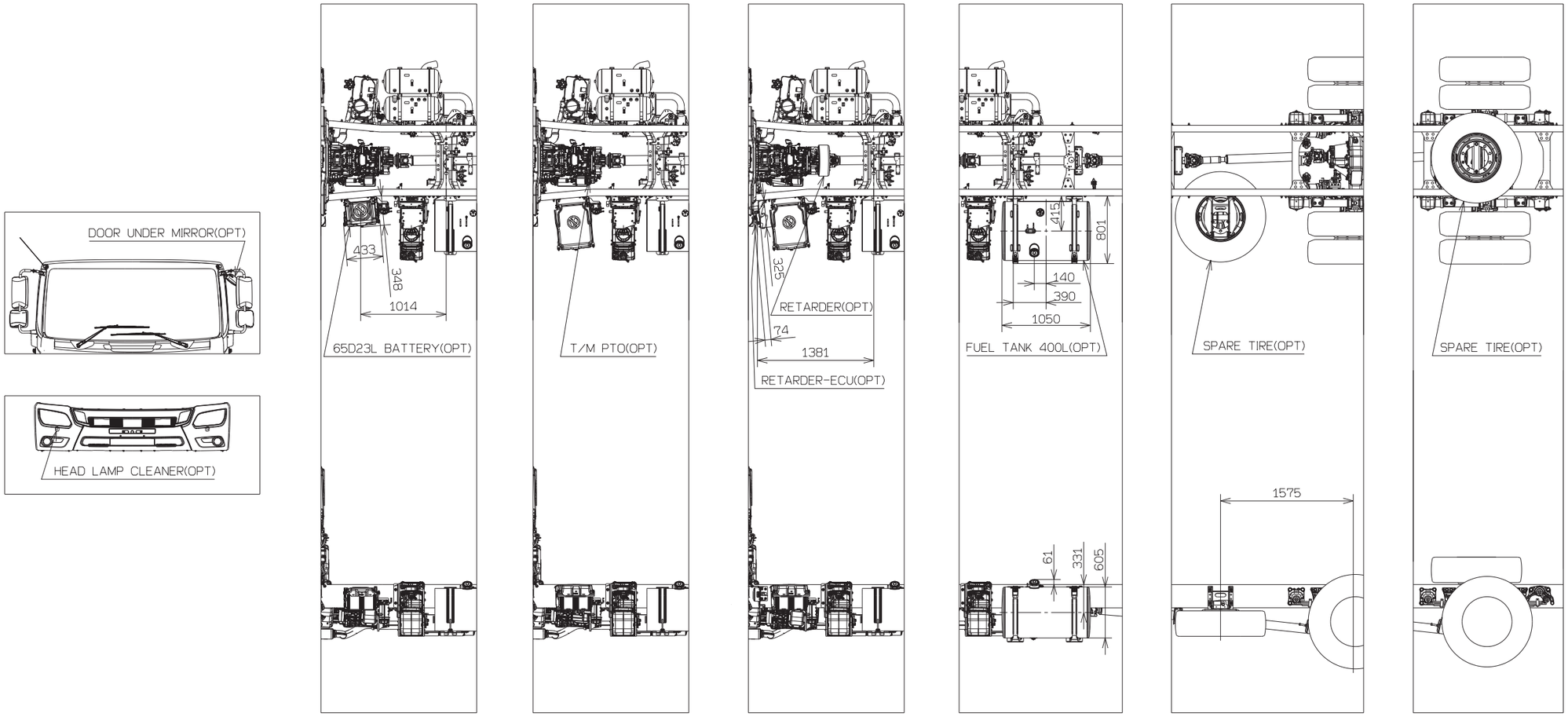

No. CH-8

Unit : mm

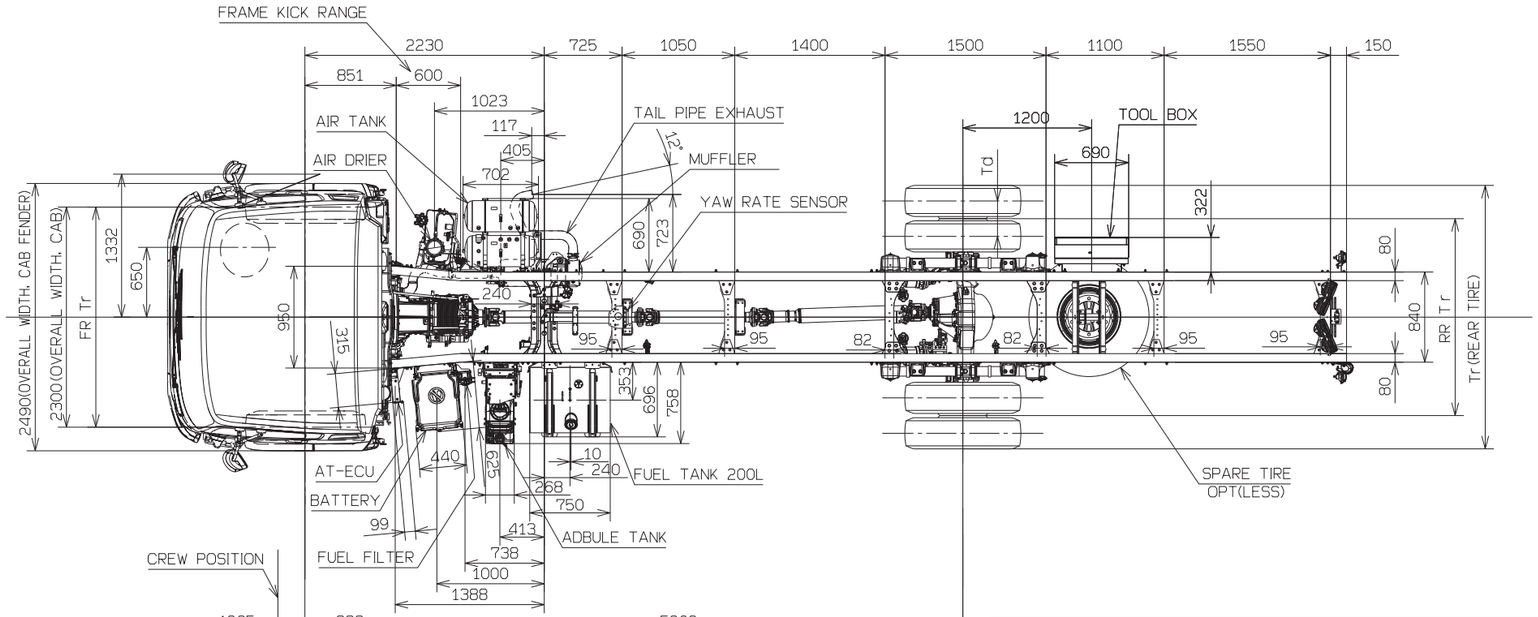

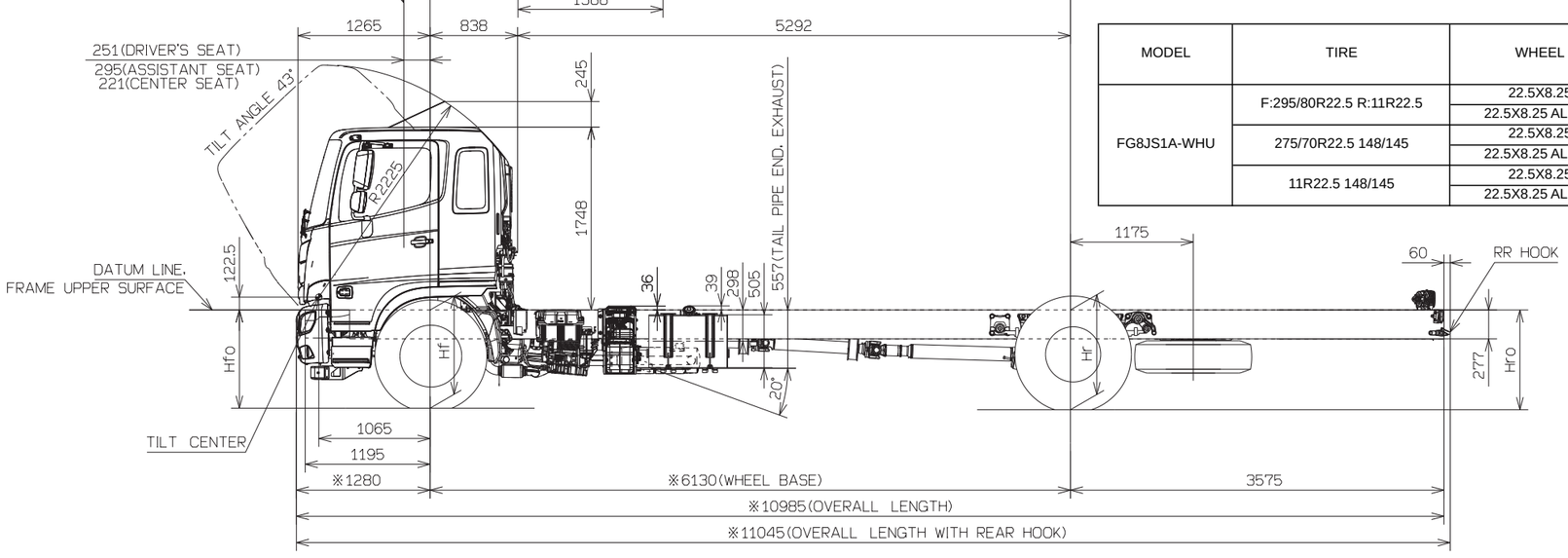

MODEL	TIRE	WHEEL	GROUND HEIGHT, FRAME UPPER SURFACE				FR Tr	RR Tr	Tr	Td
			Hf0	Hf	Hr	Hr0				
FG8JS1A-WHU	F:295/80R22.5 R:11R22.5	22.5X8.25	1000	1010	1050	1075	2050	1835	2445	330
		22.5X8.25 ALLOY	1000	1010	1050	1075	2070	1855	2465	330
	275/70R22.5 148/145	22.5X8.25	965	970	1005	1025	2050	1835	2445	330
		22.5X8.25 ALLOY	965	970	1005	1025	2070	1855	2460	330
	11R22.5 148/145	22.5X8.25	1010	1015	1050	1070	2050	1835	2445	330
		22.5X8.25 ALLOY	1010	1015	1050	1070	2070	1855	2465	330

NOTE: 1.Figures marked "※" dimensions are measured in parallel with the surface of the ground.
2.The dimension of tire to be mentioned in above table shows design figure according to JATMA or ETRTO standard.

No. CH-8

Unit : mm

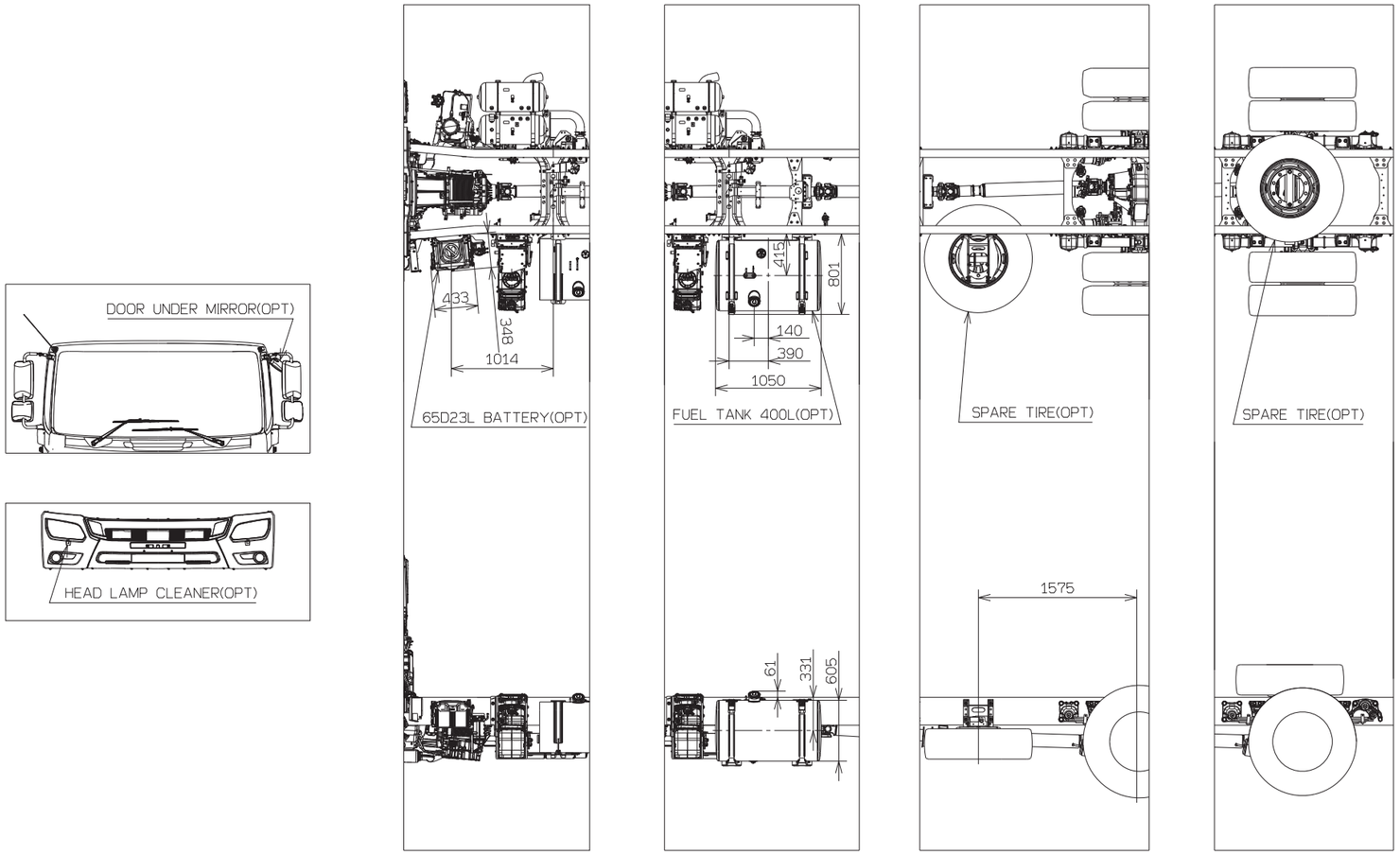

No. CH-9

Unit : mm

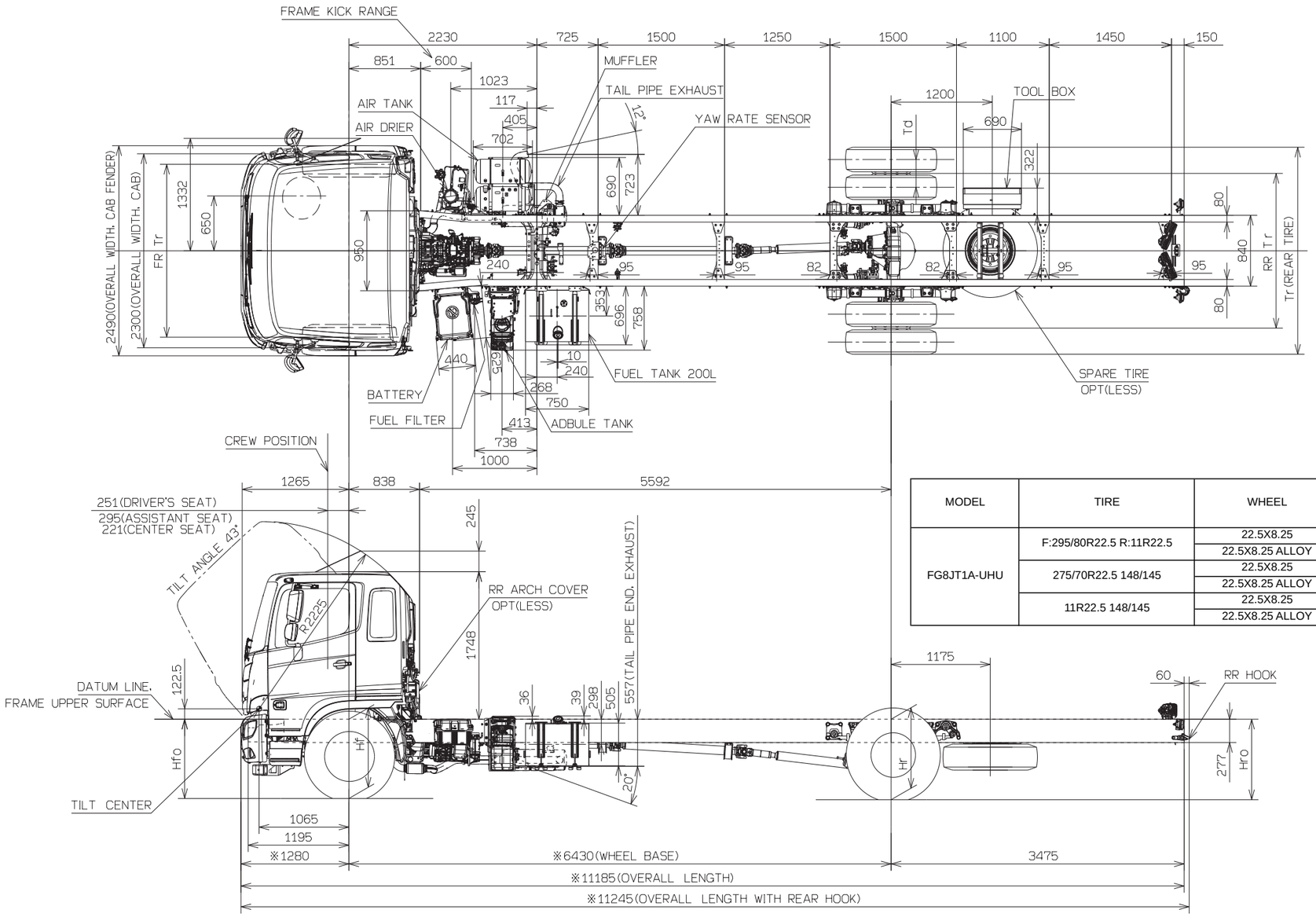

MODEL	TIRE	WHEEL	GROUND HEIGHT, FRAME UPPER SURFACE				FR Tr	RR Tr	Tr	Td
			Hf0	Hf	Hr	Hr0				
FG8JT1A-UHU	F:295/80R22.5 R:11R22.5	22.5X8.25	1005	1010	1050	1070	2050	1835	2445	330
		22.5X8.25 ALLOY	1005	1010	1050	1070	2070	1855	2465	330
	275/70R22.5 148/145	22.5X8.25	965	970	1005	1025	2050	1835	2445	330
		22.5X8.25 ALLOY	965	970	1005	1025	2070	1855	2460	330
	11R22.5 148/145	22.5X8.25	1010	1015	1050	1070	2050	1835	2445	330
		22.5X8.25 ALLOY	1010	1015	1050	1070	2070	1855	2465	330

NOTE: 1.Figures marked "※" dimensions are measured in parallel with the surface of the ground.
2.The dimension of tire to be mentioned in above table shows design figure according to JATMA or ETRTO standard.

No. CH-9

Unit : mm

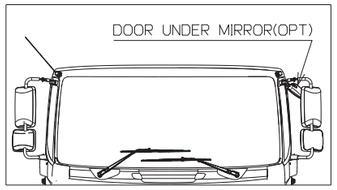

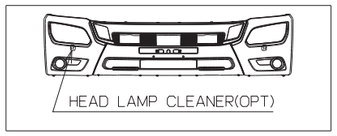

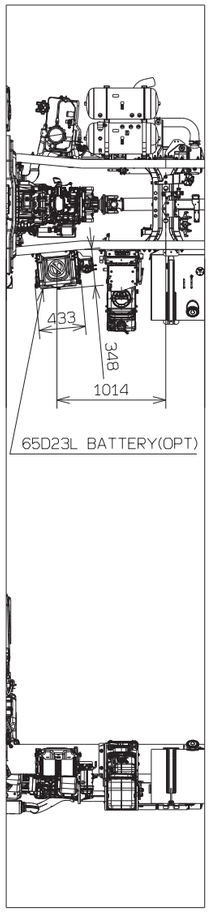

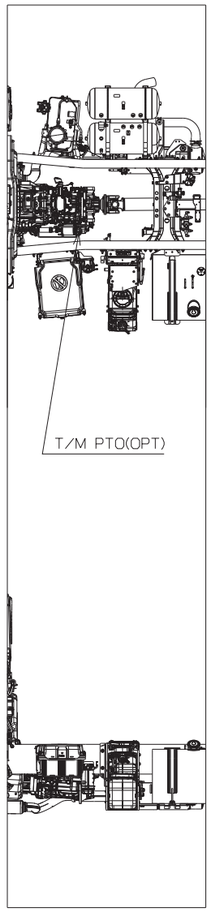

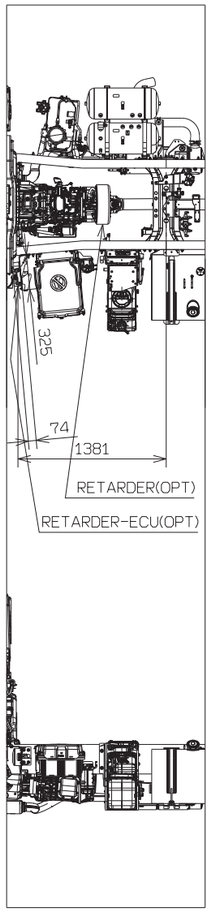

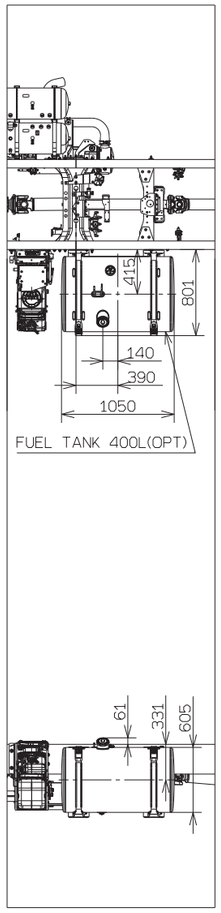

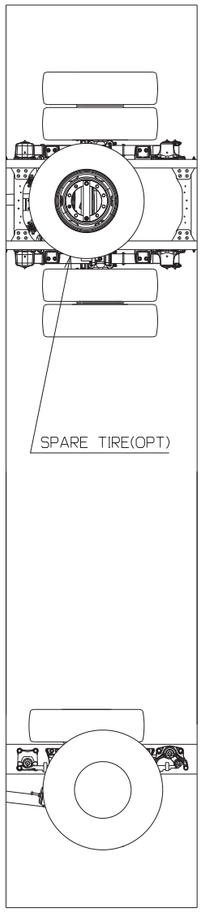

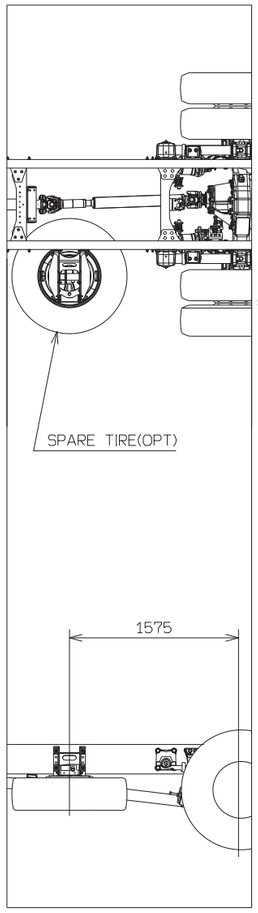

No. CH-10

Unit : mm

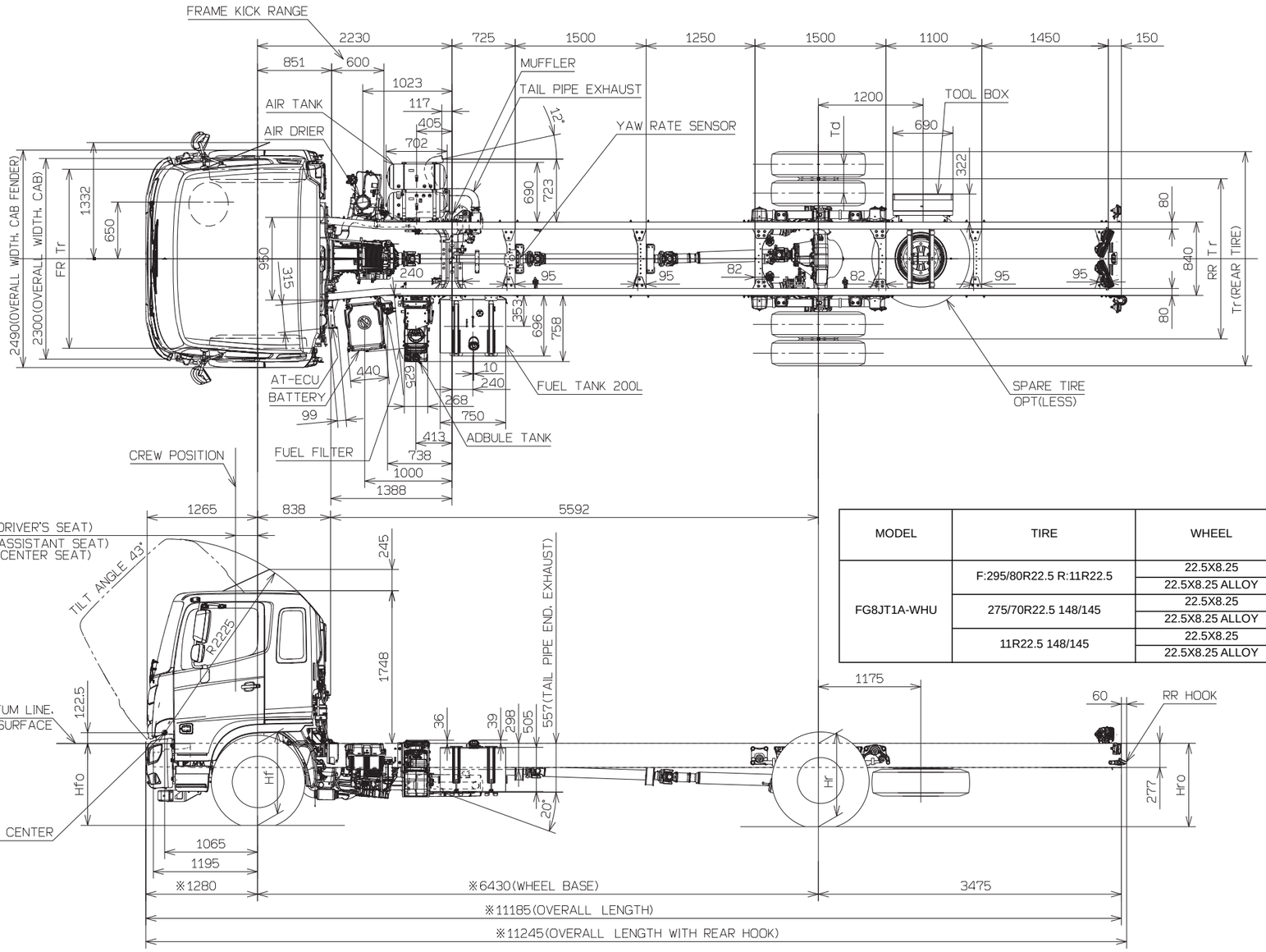

MODEL	TIRE	WHEEL	GROUND HEIGHT, FRAME UPPER SURFACE				FR Tr	RR Tr	Tr	Td
			Hf0	Hf	Hr	Hr0				
FG8JT1A-WHU	F:295/80R22.5 R:11R22.5	22.5X8.25	1005	1010	1050	1070	2050	1835	2445	330
		22.5X8.25 ALLOY	1005	1010	1050	1070	2070	1855	2465	330
	275/70R22.5 148/145	22.5X8.25	965	970	1005	1025	2050	1835	2445	330
		22.5X8.25 ALLOY	965	970	1005	1025	2070	1855	2460	330
	11R22.5 148/145	22.5X8.25	1010	1015	1050	1070	2050	1835	2445	330
		22.5X8.25 ALLOY	1010	1015	1050	1070	2070	1855	2465	330

NOTE: 1.Figures marked "※" dimensions are measured in parallel with the surface of the ground.
2.The dimension of tire to be mentioned in above table shows design figure according to JATMA or ETRTO standard.

No. CH-10
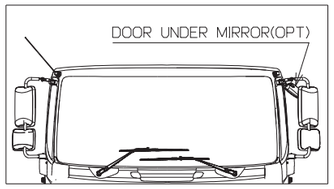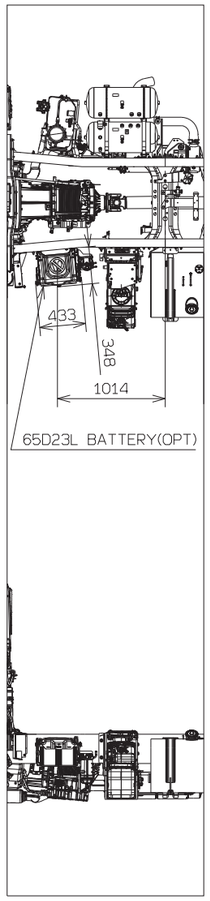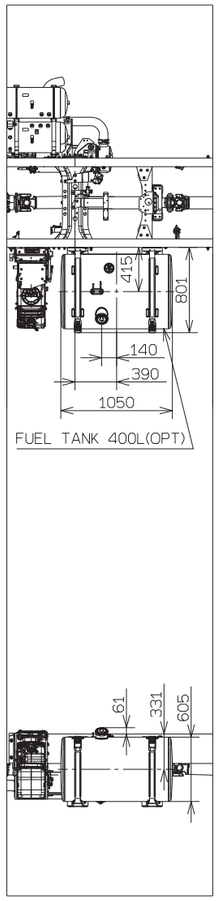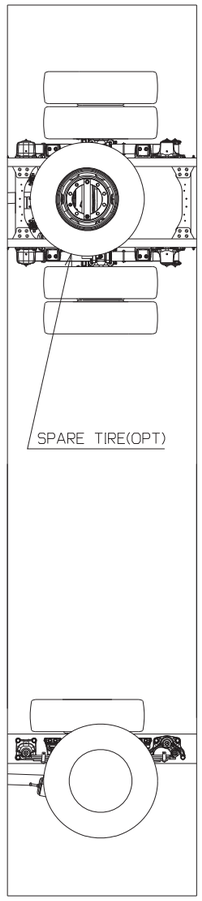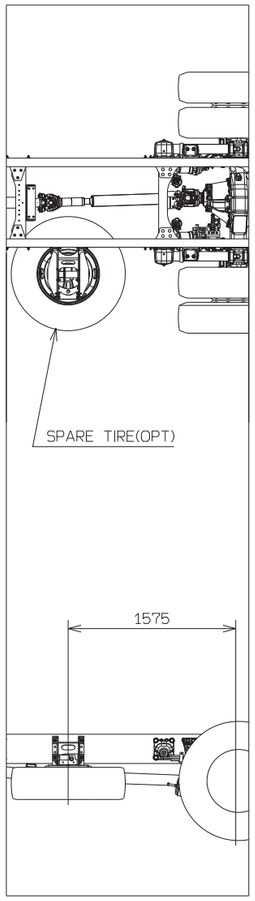
Unit : mm